LaGrange County

Zoning Ordinance

LaGrange County, Indiana

Effective Date: November 17, 2005

(Amended March 16, 2015)

TABLE OF CONTENTS

Article 1: General Provisions 1

(A) Title 1
(B) Authority 1
(C) General Purpose 1
(D) Zoning Ordinance and Map 1
(1) Districts 1
(2) Official Copy 1
(3) Amendments 2
(4) Damage 2
(5) Preservation 2
(E) Applicability and Jurisdiction 2
(F) Conflict or Consistency with Other Laws, Covenants, or Deed Restrictions 3
(1) Conflicts and Relationship with Other Regulations 3
(2) Relationship with Private-Party Easements, Covenants, or Agreements 3
(G) Compliance 3
(1) Compliance Required 3
(2) Minimum Requirements 4
(H) Severability 4
(I) Effective Date and Transitional Provisions 4
(1) Effective Date 4
(2) Violations Continue 4
(3) Legal Nonconformities Under Previous Ordinances 4
(4) Approved Projects 5
(5) Complete Applications 5
(J) Subdivision of Land 5

Article 2: Zone Districts 7

(A) General 7
(1) Districts Established 7
(2) Relationship to Overlay Districts 7
(B) Agricultural Districts 7
(1) Purpose and Intent 7
(2) Districts 7
(3) Uses 7
(4) Intensity and Dimensional Standards 7
(C) Residential Districts 8
(1) Purpose and Intent 8
(2) Districts 8
(3) Uses 9
(4) Intensity and Dimensional Standards 9

(D) Business Districts 9
(1) Purpose and Intent 9
(2) Districts 9
(3) Uses 10
(4) Intensity and Dimensional Standards 10
(E) Industrial Districts 10
(1) Purpose and Intent 10
(2) Districts 11
(3) Uses 11
(4) Intensity and Dimensional Standards 11
(F) Overlay Districts 12
(1) Purpose and Intent 12
(2) Districts 12
(G) PUD, Planned Unit Development District 12
(1) Purpose and Intent 12
(2) Types of Planned Unit Developments 12

Article 3: Use Regulations 15
(A) Agricultural Use Table 15
(B) Residential Use Table 16
(C) Use-Specific Standards for Agricultural and Residential Districts 17
(1) Agricultural Uses, AFO's, CFO's and CAFO's 17
(2) Residential Uses 21
(3) Business and Industrial Uses 22
General Business and Industrial uses LaGrange County Plan Commission: 22
(4) Institutional Uses 25
(5) Sand and Gravel Extraction 25
(D) Business Use Table 26
(E) Use Specific Standards Business Districts 27
(1) Development Plans 27
(2) Residential Uses 27
(3) Outdoor Storage 27
(4) Drive-Through Windows 28
(F) Industrial Use Table 28
(G) Use Specific Standards for Industrial Districts 29
(1) Development Plans 29
(2) Storage 29
(3) Environmental Requirements 29
(H) O-1 Overlay District 29
(1) Lot Size 30
(2) Landscaping 30
(3) Setbacks 30
(4) Access 30
(5) Parking 31
(6) Signage 31

(I) O-2, Scenic Corridor Overlay District 31
(1) Lot Size 32
(2) Residential Uses 32
(3) Platting New Lots 32
(4) Signs 32
(J) Small Wind Energy Conversion Systems (SWECS) 32
(1) A SWECS is permitted in all zoning districts, as an accessory use. 32
(2) Accessory Use. 32
(3) Minimum Lot Size, Maximum Height. 32
(4) Height 33
(5) Noise 33
(6) Survival Speed.. 33
(7) Setback. 33
(8) Abandonment. 33
(9) If, after construction, the Owner or Operator receives a written complaint 33
(K) Wind Energy Conversion Systems (WECS) – Overlay District 33
(1) A Commercial Wind Energy Conversion System (WECS) and WECS Overlay District within the County shall meet the following standards: 34
(2) Following the creation of a WECS Overlay District 34
(3) After the Development Plan approval is obtained 37
(4) The Re-zoning Application, Development Plan (including but not limited to Decommissioning Plan and each update thereof and the assurance of completion and continued operations) 38
(5) Prior to and during construction the Applicant 38
(6) Design and installation shall conform with the following: 40
(7) At any non-Co-Applicant residentially used structure or residentially zoned lot, public school, or public library 41
(8) The minimum distance between the ground and any protruding blade(s) utilized on a WECS shall be fifty (50) feet 41
(9) Setbacks shall be as follows: 42
(10) Post Construction and continued maintenance requirements are as follows: 42
(11) All new building lots and new dwellings approved in the Wind Energy Conversion System Overlay district 45
(L) Planned Unit Development District 46
(M) Accessory Uses 46
(1) Purpose 46
(2) General Requirements 46
(3) Permitted Accessory Uses 47
(N) Temporary Uses 50
(1) Permitted Uses 50
(2) Standards, Prohibitions and Restrictions 51
(O) Adult Businesses 52
(1) Prohibitions 52
(2) Conditional Uses 52
(3) Exterior Display 52
(P) Towers and Similar Structures 52
(1) Location 52

(2) Maintenance....53
(3) Co-location, Use, and Documentation....53

Article 4: Dimensional Standards....56

(A) Dimensional Standards....56
(1) Water Bodies....56
(2) Front Setbacks....56
(3) Agricultural Dimensional and Intensity Standards....57
(4) Institutional Dimensional and Intensity Standards....58
(5) Residential Dimensional and Intensity Standards....58
(6) Business Dimensional and Intensity Standards....60
(7) Industrial Dimensional and Intensity Standards....61
(8) PUD Dimensional and Intensity Standards....62

(B) Measurements....62
(1) Percentages and Fractions....62
(2) Distances....62
(3) Lot Area....62
(4) Sign Area....62
(5) Height....63
(6) Setback....64

Article 5: Development and Design Standards....68

(A) General Standards....68
(1) Number of Uses per Lot....68
(2) Intersection Visibility....68
(3) Essential Services....68
(4) Similar Uses....68
(5) Outdoor Storage of Vehicles and Materials....69
(6) Noise....69
(7) Lighting....70

(B) Parking and Loading....71
(1) Purpose....71
(2) Existing Uses....71
(3) Location....72
(4) Parking Standards....73
(5) Minimum Off-Street Parking Space Requirements....75
(6) Off-Site Parking Facilities....77
(7) Loading Requirements....78
(8) Vehicle Stacking Areas....80
(9) Accessible Parking for Physically Challenged Persons....81
(10) Parking and Loading Space Specifications....82

(C) Landscaping....84
(1) Purpose....84
(2) Applicability....84
(3) Standards for Landscape Materials....84
(4) General Requirements....84

(D) Signs....85

(1) Purpose and Applicability 85
(2) Signs Authorized Without a Sign Permit 86
(3) Signs Authorized With a Permit 87
(4) Computations 89
(5) Sign Permit Requirements 90
(6) Prohibited Signs 92
(7) Construction Requirements 93
(8) Non-Conforming Signs 94
(9) Sign Development Plans 94
(10) First Amendment Protection 95
(11) Administration 95

(E) Planned Unit Developments 97

(1) Authority 97
(2) Criteria 97
(3) Standards 98

(F) Development Plans 98

(1) Authority 98
(2) Criteria 98

(G) Manufactured Housing 99

(1) Single-family Dwellings 99
(2) Other Manufactured Homes 99
(3) Manufactured Home Subdivisions 99
(4) Manufactured Home Parks 99
(5) Campgrounds and Recreational Vehicle Parks 101

(H) Floodplain Regulations 103

(1) Statutory Authorization, Findings of Fact, Purpose, and Objectives 103
(2) Definitions 104
(3) General Provisions 117
(4) Administration 120
(5) Provisions for Flood Hazard Reduction 122
(6) Variance Procedures 131
(7) Severability 134
(8) Effective Date 134

Article 6: Nonconforming Uses 136

(A) General Provisions 136

(1) Purpose and Intent 136
(2) Applicability 136
(3) Continuation Permitted 136
(4) Determination of Nonconforming Status 136
(5) Repairs and Maintenance 137

(B) Nonconforming Use 137

(1) Existing Nonconforming Use 137
(2) Total Lifetime Structural Repairs 137
(3) Change of Use 137
(4) Loss of Legal Nonconformity Status 138
(5) Residential Uses Excepted 138

(C) Legal Lots of Record 138
(D) Nonconforming Sites 139

Article 7: Administration 140

(A) Administrative and Decision Making Bodies 140
(1) Board of County Commissioners 140
(2) County Council 141
(3) Plan Commission 142
(4) Board of Zoning Appeals 142
(5) Staff 145
(B) Amendments 146
(1) Map Amendments 147
(2) Text Amendments 147
(3) Written Commitments 148
(C) Variances 149
(1) General 149
(2) Use Variance 150
(3) Development Standards Variance 150
(4) Conditions and Commitments 151
(5) Notice and Hearing 151
(6) Findings of Fact 151
(D) Conditional Uses 151
(1) General 151
(2) Criteria 151
(E) Administrative Appeals 152
(1) Authority 152
(2) Application 152
(F) Planned Unit Developments 152
(1) Initiation 152
(2) Hearing and Decision 153
(3) Modification Procedure 153
(4) Review Procedure 153
(5) Administrative Adjustments 155
(6) Abandonment or Expiration 155
(7) Permits and Enforcement 156
(8) Covenants and Maintenance; Financial Guarantees 156
(G) Development Plans 158
(1) Primary Approval 158
(2) Secondary Approval 159
(H) Other Administrative Provisions 159
(1) Beneficial Use Determination 159
(2) Findings 159
(3) Economic Hardship/Taking Standard 160
(4) Hardship Relief Petition 160
(5) Determination of Substantial Economic Hardship 161
(6) Hearing Officer 161

(7) Public Hearing 162
(8) Determination on Petition 162
(9) County Commissioners Review and Consideration 164
(10) Time Limits/Transferal of Relief or Incentives 164

Article 8: Enforcement 165

(A) Authority 165
(1) Inspections 165
(2) Stop-Work Orders 165
(B) Violations and Penalties 165
(1) Complaint 165
(2) Nuisance Declared 166
(3) Penalties 166
(4) Injunction 166
(5) Other Remedies 166
(6) Citations 166

Article 9: Definitions and Rules of Interpretation 169

(A) Meaning and Intent 169
(B) Text Controls 169
(C) Lists and Examples 169
(D) Computation of Time 169
(E) References to Other Regulations, Publications and Documents 169
(F) Public Officials and Agencies 169
(G) Delegation of Authority 170
(H) Technical and Non-Technical Words 170
(I) Mandatory and Discretionary Terms 170
(J) Conjunctions 170
(K) Tense and Usage 170
(L) Gender 170
(M) Definitions 171

Index 191

THIS PAGE IS INTENTIONALLY LEFT BLANK

Article 1: General Provisions

(A) Title

This Ordinance shall be known as, referred to, and cited as the "Zoning Ordinance of LaGrange County, Indiana," and is hereinafter referred to as "this Ordinance."

(B) Authority

This Ordinance is adopted under the authority granted by the 600 Series of §36-7-4 of the Indiana Code and amendments thereto.

(C) General Purpose

This purpose of this Ordinance is as follows:

(1) Securing adequate light, air, convenience of access, and safety from fire, flood, and other danger;

(2) Lessening or avoiding congestion in public ways;

(3) Promoting the public health, safety, comfort, morals, convenience, and general welfare;

(4) Implementing the Comprehensive Plan; and

(5) Otherwise accomplishing the purposes of IC 36-7-4.

(D) Zoning Ordinance and Map

(1) Districts

The County is divided into zones or districts as shown on the official zoning map. This map is hereby adopted by reference and declared to be a part of this Title. The map is on file in the Planning Department Office and available for public inspection during regular business hours.

(2) Official Copy

(a) Zoning Ordinance

The official zoning ordinance shall be identified by the signature of the chairperson of the Board of County Commissioners and attested to by the county auditor, and shall be available in the Office of the County Auditor.

(b) Zoning Map

The official zoning map shall be identified by the signature of the chairman of the Board of County Commissioners and attested to by the county auditor, and bearing the seal of LaGrange County under the following words: "This is to certify that this is the Official Zoning Map adopted August 15, 1973 and effective December 17, 1973.

(3) Amendments

The zoning map may be amended from time to time as set forth in this Title.

(4) Damage

In the event the official zoning map becomes damaged, destroyed, lost, or difficult to interpret because of the nature or number of changes and additions, the County Commissioners may direct the Plan Commission to prepare a new official zoning map which when adopted shall supersede the prior map. The new official zoning map may correct drafting or other errors or omissions in the prior map, but no such correction shall have the effect of amending the previous official zoning map. The new official zoning map shall be identified by the signature of the chair of the Board of County Commissioners attested to by the county auditor and bearing the seal of the County under the following words: "This is to certify that this Official Zoning Map supersedes and replaces on this day (date) the Official Zoning Map adopted August 15, 1973 of LaGrange County, Indiana."

(5) Preservation

Unless the prior official zoning map has been lost or destroyed, the prior map or any significant part thereof remaining shall be preserved, together with all available records pertaining to its adoption or amendment.

(E) Applicability and Jurisdiction

The provisions of this Ordinance shall apply to all structures, lands, water, and air within the unincorporated portions of LaGrange County and the incorporated towns of Topeka, LaGrange, Shipshewana and Wolcottville, including land owned by local, county, state, or federal agencies, to the extent allowed by law. Any use not listed as permitted in any zoning district shall require approval of a land use variance by the Board of Zoning Appeals.

(F) Conflict or Consistency with Other Laws, Covenants, or Deed Restrictions

(1) Conflicts and Relationship with Other Regulations

(a) When the provisions of this Ordinance are inconsistent with one another, or when the provisions of this Ordinance conflict with provisions found in other ordinances, codes, or regulations adopted by LaGrange County, the more restrictive provision shall govern unless the terms of the provisions specify otherwise.

(b) It shall be the developer's or applicant's responsibility to determine and comply with all other applicable county, state, or federal codes or regulations governing development and land use activities.

(2) Relationship with Private-Party Easements, Covenants, or Agreements

This Ordinance is not intended to interfere with or abrogate any easements, covenants, or agreements between parties, provided that wherever this Ordinance proposes a greater restriction upon the use of buildings or land, upon the location or height of buildings or structures, or upon requirements for open areas than those that are imposed or required by such easements, covenants, or agreements between parties, the provision of this Ordinance shall govern. In no case shall the county be obligated to enforce the provisions of any easements, covenants, or agreements between parties.

(G) Compliance

(1) Compliance Required

No structure or part thereof shall hereafter be located, erected, moved, reconstructed, extended, enlarged, converted, structurally altered, used, or occupied without full compliance with the provisions of this Ordinance and all other applicable local, county, and state regulations.

A Zoning Compliance Certificate is required for any of the following and shall expire and become void one year after the date if its issue unless the use on the property for which the petition is approved has substantially been put into effect:

(a) Occupancy or use of any structure hereafter created, erected, changed, converted, or wholly or partly altered or enlarged.

(b) Occupancy or use of vacant land, except for the raising of crops or pasturing of livestock.

(c) Change in the use of an existing structure to a different use.

(d) Change in the use of land to a different use, except for the raising of crops or pasturing of livestock.

(e) Change in the use or character of a nonconforming use.

(2) Minimum Requirements

The provisions of this Ordinance shall be held to be minimum requirements necessary for the promotion of the public health, safety, and general welfare, and shall be liberally construed in favor of the County and shall not be construed to be a limitation or repeal of any other power now possessed by LaGrange County.

(H) Severability

If any Court of competent jurisdiction rules any provision of this Ordinance invalid, that ruling shall not affect any provision not specifically included in the judgment. If any Court of competent jurisdiction rules invalid the application of any provision of this Ordinance to a particular property, building, or other structure, or use, that ruling shall not affect the application of the Ordinance provisions to any property, building, other structure, or use not specifically included in the judgment.

(I) Effective Date and Transitional Provisions

(1) Effective Date

This Zoning Ordinance shall take effect after publication of the notice of adoption as provided by IC 36-7-4-610.

(2) Violations Continue

Any violation under previous ordinances repealed by this Ordinance shall continue to be a violation under this Ordinance and be subject to penalties and enforcement under Article 8, Section B, unless the use, development, construction, or other activity complies with the provisions of this Ordinance.

(3) Legal Nonconformities Under Previous Ordinances

Any legal nonconformity under any previous ordinances repealed by this Ordinance is also a legal nonconformity under this Ordinance, as long as the situation that resulted in the nonconforming status under the previous ordinances continues to exist. If a nonconformity under the previous ordinances becomes conforming because of the adoption of this Ordinance, then the situation will no longer be a nonconformity.

(4) Approved Projects

(a) Any building, structure, or development for which a permit was issued prior to the effective date of this Ordinance may, at the applicant's option, be completed in conformance with the issued permit and any other applicable permits and conditions, even if such building, structure, or development does not fully comply with provisions of this Ordinance.

(b) If the building or structure is not completed within the time allowed under the original permit or any extension granted, then the building, structure, or development may be constructed, completed, or occupied only in compliance with this Ordinance.

(c) If construction does not commence or is not completed according to the applicable permit terms, the zoning administrator may, for good cause shown, grant an extension of up to one year for such construction under the terms of the previously applicable ordinance(s).

(d) Any re-application for an expired project approval shall meet the standards in effect at the time of re-application.

(5) Complete Applications

(a) All projects for which a complete application was submitted and accepted by the County prior to the effective date of this Ordinance may, at the applicant's option, be reviewed wholly under the terms of the previous Zoning Ordinance. If approved, these projects may be carried out in accordance with the development standards in effect at the time of application. Any re-application for an expired permit shall meet the standards in effect at the time of re-application.

(b) Projects for which no application has been submitted and accepted as complete prior to the effective date of this Ordinance shall be subject to all requirements and standards of this Ordinance.

(J) Subdivision of Land

The subdivision of land is permitted in any district established by this Title, provided that said action is in accordance with the requirements of the applicable zoning district and the subdivision control ordinance.

THIS PAGE IS INTENTIONALLY LEFT BLANK

Article 2: Zone Districts

(A) General

(1) Districts Established

The County is hereby divided into zoning districts as detailed in this Article to carry out the purposes of this Title. These districts are described in this article. The boundaries are as shown on the official zoning map.

(2) Relationship to Overlay Districts

In addition to all requirements of the underlying zoning district, overlay districts are subject to any additional regulations superimposed by the terms of this Ordinance.

(B) Agricultural Districts

(1) Purpose and Intent

Agricultural districts are established in LaGrange County to promote and protect agricultural activity and agricultural business in appropriately located areas consistent with the Comprehensive Plan.

(2) Districts

(a) A-1, General Agricultural District

The purpose of the A-1 General Agricultural District is to provide appropriate areas for farming and to protect rural areas from urban encroachment unless and until such areas are adaptable to orderly urban expansion. Residential development is limited; this district is not intended as a large-lot residential zone. It is the intent of this ordinance to allow the continuation of existing agricultural operations and to protect the use and value of both agricultural and non-agricultural land within the County.

(3) Uses

See Article III, Section A: Use Table, for a list of allowed uses in the Agricultural Districts.

(4) Intensity and Dimensional Standards

All uses and structures in the Agricultural Districts must comply with the Intensity and Dimensional Standards of Article 4, Section A: Dimensional Standards.

(C) Residential Districts

(1) Purpose and Intent

The residential districts in this Section are created for the following purposes:

(a) Provide appropriately located areas for a variety of types of residential development that are consistent with the LaGrange County Comprehensive Plan and with standards of public health and safety established by this Ordinance and any other appropriate governmental body;

(b) Ensure adequate light, air, privacy and open space for each dwelling;

(c) Insulate residents from the harmful effects of excessive noise, population density, traffic congestion, and other significant adverse environmental effects;

(d) Protect residential areas from fires, explosions, toxic fumes and substances, and other public safety hazards;

(e) Provide sites for public and semipublic land uses needed to complement residential development or requiring a residential environment; and

(f) Ensure the provision of public services and facilities needed to accommodate planned population densities.

(2) Districts

(a) S-1, Suburban Residential District

The purpose of the S-1 District is to accommodate residential subdivisions served by approved infrastructure and sewage disposal. Generally these are located near or adjacent to villages and towns.

(b) U-1, Urban Residential District

The purpose of the U-1 District is to encourage development of new and infill housing in the existing villages and incorporated towns in LaGrange County. This district is intended for high-density housing where sewers are available and on infill lots with approved septic systems.

(c) L-1, Lake Residential District

The purpose of the L-1 District is to provide for responsible residential development in the lake areas of LaGrange County and to provide desirable residential neighborhoods while protecting the county's lake resources.

(3) Uses

See Article 3, Section B: Use Table, for a list of allowed uses in the residential districts.

(4) Intensity and Dimensional Standards

All uses and structures in the residential districts must comply with the Intensity and Dimensional Standards of Article 4, Section A: Dimensional Standards.

(D) Business Districts

(1) Purpose and Intent

The business districts are established for the following purposes:

(a) To provide appropriately located areas for a full range of office and commercial uses for LaGrange residents, visitors, businesses, and workers;

(b) To strengthen LaGrange County's economic base, and to provide employment opportunities;

(c) To create suitable environments for various types of commercial uses, and protect them from the adverse effects of incompatible uses;

(d) To minimize the impact of commercial development on abutting residential districts;

(e) To ensure that the appearance and effects of commercial buildings and uses are harmonious with the character of the area in which they are located; and

(f) To ensure the provision of adequate off-street parking and loading facilities.

(2) Districts

(a) B-1, General Business District

The purpose of the B-1 District is to provide appropriate locations for offering a broad range of goods and services to residents, visitors, and workers in LaGrange County.

(b) B-2, Neighborhood Business District

The purpose of the B-2 district is to provide appropriate locations convenient to neighborhoods for professional office uses, personal service uses and retail service uses, which dispense convenience goods and services directly to consumers on the premises. Businesses in this district are conducted primarily indoors and are of a scale appropriate to residential areas.

(c) B-3, Highway Business District

The purpose of the B-3 District is to provide for highway-oriented business uses offering accommodations, supplies and services to the general public, and ordinarily are located along highways designated as major arterials.

(d) B-4, Central Business District

The purpose of the B-4 District is to serve as the primary business district of the community in which it is located, where a full range of goods and services are offered and where the land use intensity is greatest. This district is the focal point for community identification, highly accessible to the entire trade area and designed for pedestrian oriented services.

(3) Uses

See Article 3, Section D: Use Table, for a list of allowed uses in the business districts.

(4) Intensity and Dimensional Standards

All uses and structures in the business districts must comply with the Intensity and Dimensional Standards of Article 4, Section A: Dimensional Standards.

(E) Industrial Districts

(1) Purpose and Intent

The industrial districts are established for the following purposes:

(a) To provide appropriately located areas consistent with the LaGrange County Comprehensive Plan for a variety of industrial uses;

(b) To strengthen the County's economic base, and provide employment opportunities close to home for residents of the County and surrounding communities;

(c) To create suitable environments for various types of and industrial uses, and protect them from the adverse effects of incompatible uses;

(d) To minimize the impact of office and industrial development on abutting districts;

(e) To help ensure that the appearance and effects of industrial buildings and uses are harmonious with the character of the area in which they are located; and

(f) To ensure the provision of adequate off-street parking and loading facilities.

(2) Districts

(a) I-1, Light Industrial District

The purpose of the I-1 District is to encourage industrial activity with limited effects on surrounding land uses. These uses are to be conducted entirely within enclosed buildings and produce a minimum of noise, air, or water pollution.

(b) I-2, Heavy Industrial District

The purpose of the I-2 District is to provide appropriate locations for those industrial uses that require outside storage or activity. Often these industries have objectionable factors such as noise that are difficult to eliminate. These industries are buffered by sufficient area to minimize any adverse effects, and wherever practical, this district is removed as far as possible from residential areas and buffered by intervening lighter industrial and business districts.

(c) I-3, Rural Industrial District

The purpose of the I-3 District is to provide suitable locations for farm-based industries that are too large to be classified as farm-based businesses but are appropriately located in agricultural and farming areas where they have access to labor supplies. These industries are located in areas with adequate access and other infrastructure.

(3) Uses

See Article 3, Section F: Use Table, for a list of allowed uses in the industrial districts.

(4) Intensity and Dimensional Standards

All uses and structures in the industrial districts must comply with the Intensity and Dimensional Standards of Article 4, Section A: Dimensional Standards.

(F) Overlay Districts

(1) Purpose and Intent

The purpose of the overlay districts is to accommodate special situations that are not generally appropriate to a zoning district. The overlay zones may encompass one or more underlying zoning districts, and the provisions of the overlay district are superimposed upon the property included in the district.

(2) Districts

(a) O-1 Overlay District

The purpose of the O-1 Overlay District is to provide additional regulations for the State Road 9 Corridor that will protect and enhance the overall quality of development along this prominent corridor in LaGrange County.

(b) O-2, Scenic Corridor Overlay District

The purpose of the O-2, Scenic Corridor Overlay District is to provide additional regulations the various scenic corridors located throughout LaGrange County.

(c) Wind Energy Conversion System (WECS) – Overlay District

The purpose of the WECS Overlay District is to provide additional regulations for the location, construction, and operation of a WECS in order to achieve the benefits of a WECS and to avoid and/or minimize the risks, dangers and inconvenience to the health, safety and welfare of LaGrange County.

(G) PUD, Planned Unit Development District

(1) Purpose and Intent

This district is designed to accommodate large or mixed-use developments and to promote flexibility and creativity in land development consistent with the requirements of IC 36-7-4, the 1500 Series.

(2) Types of Planned Unit Developments

(a) Residential

The purpose of the residential PUD is to allow for large residential developments with varied housing types and lot sizes and to ensure that such developments have adequate facilities and services.

(b) Business

The purpose of the business PUD is to encourage the development of appropriately located commercial centers and office parks and to ensure that these developments have adequate facilities and services.

(c) Industrial

The purpose of the industrial PUD is to encourage the development of appropriately located industrial parks and to ensure that these developments have adequate facilities and services.

(d) Mixed Use

The purpose of the mixed use PUD is to encourage development of desirable neighborhoods with a variety of housing types, convenient business services, and employment opportunities in close proximity to residences.

THIS PAGE IS INTENTIONALLY LEFT BLANK

Article 3: Use Regulations

(A) Agricultural Use Table

Table 3-A-1

AGRICULTURAL USE TABLE P=Permitted by Right C=Conditional Use			
Use Category	**Specific Use**	**Zoning District**	**Additional Regulations**
		A-1	
Residential	1-family dwelling	P	Art. 3 – Sec. (C)(2)(a)
	2-family dwelling	P	Art. 3 – Sec. (C)(2)(a)
	Farm worker housing	P	Art. 3 – Sec. (C)(2)(b)
Crops	All crop raising (field crops, truck gardens, etc.)	P	
Livestock	Animal feeding operation	P	Art. 3 – Sec. (C)(1)
	Concentrated feeding operation	P	Art. 3 – Sec. (C)(1)
	Confined Animal Feeding Operation	P	Art. 3 – Sec. (C)(1)
	Pasturing	P	
Business	Agricultural building	P	
	Agribusiness	P	
	Auction	P	
	Bake Shop	P	
	Bed and breakfast use	P	Art. 3 – Sec. (C)(3)(a)
	Bicycle Shop	P	
	Blacksmith Shop	P	
	Butcher Shop	C	
	Campground or RV park	C	Art. 5 – Sec. (G)(5)
	Carriage; wagon; buggy manufacturing	P	
	Cider mill	P	
	Dry goods store	P	
	Dress Making	P	
	Farm-based Business	P	Art. 3 – Sec. (C)(3)(c)
	Farm Market	P	
	Furniture and Cabinet shop	P	
	Greenhouse	P	
	Home-based business	P	Art. 3 – Sec. (C)(3)(b)
	Mini-warehouse or RV storage	C	

AGRICULTURAL USE TABLE P=Permitted by Right C=Conditional Use			
Use Category	**Specific Use**	**Zoning District**	**Additional Regulations**
		A-1	
	Plant Nursery	P	
	Riding stable	P	
	Shoe shop	P	
	Shooting Range	C	
	Stable (commercial)	P	
	Stable (private)	P	
	Tailor shop	P	
	Tool Sharpening	P	
	Woodworking	P	
	Winery	P	
	Cemetery	P	
	Private school	P	
Institutional	Public school	P	
	Public park or recreational facility	P	Art. 3 – Sec. (C)(4)(b)
	Prison	C	
	Private park, recreational, or entertainment facility	C	Art. 3 – Sec. (C)(4)(b)
	Religious facility	P	Art. 3 – Sec. (C)(4)(a)
	Waste disposal facility	C	
	Other institutional use	C	

(B) Residential Use Table

Table 3-B-1

RESIDENTIAL USE TABLE P=Permitted by Right C=Conditional Use					
Use Category	**Specific Use**	**Zoning Districts**			**Additional Regulations**
		S-1	**U-1**	**L-1**	
Residential	1-family dwelling	P	P	P	Art. 3 – Sec. (C)(2)(a)
	2-family dwelling		P		Art. 3 – Sec. (C)(2)(a)

RESIDENTIAL USE TABLE P=Permitted by Right C=Conditional Use					
Use Category	**Specific Use**	**Zoning Districts**			**Additional Regulations**
		S-1	**U-1**	**L-1**	
	Boarding or rooming house		C		Art. 3 – Sec. (C)(2)(c)
	Manufactured home subdivision	P	P		Art. 5 – Sec. (G)(3)
	Manufactured home park	C	P	C	Art. 5 – Sec. (G)(4)
	Multifamily dwelling		P		Art. 3 – Sec. (C)(2)(a)
	Guest Quarters	C	C		
Business	Bed and breakfast use	C	P	C	Art. 3 – Sec. (C)(3)(a)
	Boat storage			C	
	Campground or RV park	C	C	C	Art. 5 – Sec. (G)(5)
	Home-based business	P	P	P	Art. 3 – Sec. (C)(3)(b)
	Marina	C	C	C	
	Mini-warehouse or RV storage		C		
Agriculture	Plant nursery	P			
Institutional	Cemetery	P	P	P	
	Other institutional use	C	C	C	
	Public school	P	P	P	
	Private park or recreational facility	C	C	C	Art. 3 – Sec. (C)(4)(b)
	Private school	C	C	C	
	Public park or recreational facility	P	P	P	Art. 3 – Sec. (C)(4)(b)
	Religious facility	P	P	P	Art. 3 – Sec. (C)(4)(a)

(C) Use-Specific Standards for Agricultural and Residential Districts

(1) Agricultural Uses, AFO's, CFO's and CAFO's

(a) AFO's and CFO's

Animal feeding operations and concentrated feeding operations shall comply with all state and county health and environmental regulations, as well as all federal laws governing such uses. An animal feeding operation is thirty (30) animal units or more as determined from the following table. When more than one type of animal is maintained in the operation, the number of animal units is the sum of the animal units for each type of animal. To use the following table, first determine the total number of animals by type. Multiply the number by the "animal unit factor" in column 3 to give the number of animal units by animal type. Add all the numbers from column 4 to get the total number of animal units for your facility.

TABLE 3-C-1

ANIMAL UNIT CALCULATION TABLE

1. Animal Type	2. Number of Animals	3. Animal Unit Factor	4. Number of Animal Units
Beef Dairy Calves under 400 lbs.		.2	
Milking and Dairy Cows		1.2	
Heifers 800 to 1200 lbs.		1.0	
Heifers 400 to 800 lbs.		.6	
Steers or Cows (400 lbs.) to market		1.0	
Bulls		1.4	
Veal Calves		.3	
Pigs up to 55 lbs.		.05	
Pigs 55 lbs. to market		.30	
Sows		.4	
Boars		.5	
Chicken Layers		.004	
Chicken Broilers		.005	

Ducks		.006	
Turkeys		.02	
Sheep		.1	
Draft Horse		2.0	
Buggy/Pleasure Horse		1.0	
Bison		1.0	
Any Other Animal Not Listed in this Table		Average weight of the animal in pounds divided by 1,000 pounds	
Total Number of Animal Units (Add up all numbers in column 4)			Animal Units =

(b) Site Plan Submission

New AFOs, CFOs, CAFOs and/or AFOs or CFOs expanding to a CAFO shall comply with all applicable state and federal laws and county regulations governing such uses. CFO's and CAFO's shall also submit a site plan to the LaGrange County Planning and Zoning Department for review and determination by the LaGrange County Plan Commission. AFO's shall submit a site plan to the LaGrange County Plat Committee for review and determination by the LaGrange County Plat Committee. The following submissions shall be included in the site plan:

1. A scaled drawing representing the dimensions and the shape of the lot to be built upon, the size and location of existing buildings, and the location and dimensions of the proposed building or alteration;
2. The boundaries of the property;
3. The general topography of the region;
4. The location of all residential dwellings, businesses, public buildings, and recreational areas within a one-half (½) mile radius of the livestock facilities;
5. The existence, if any, and type of test/monitoring wells;
6. An odor control plan that addresses confinement buildings, manure storage, dust and particulate matter;
7. A mortality plan;

8. Evidence of compliance with the requirements of Article 3, Section (C)(1)(e) herein;
9. Any and all other information deemed necessary by the LaGrange County Plan Commission for the administration and enforcement of this ordinance, including but not limited to, existing or proposed uses of the buildings and land; compliance with county health department and drainage board regulations; and status of county highway department approval.

(c) Animal Feeding Operations

Animal feeding operations shall comply with all state and county health and environmental regulations. An AFO shall not be expanded to a CFO until it has been in operation for at least 3 years unless such operation meets all CFO requirements.

(d) Concentrated Animal Feeding Operations

Concentrated animal feeding operations shall comply with all applicable Indiana and federal laws governing such uses.

(e) Manure Management Plans

Any application for a zoning compliance certificate for any new buildings or waste-holding structures associated with an AFO, CFO or CAFO shall include a written manure management plan detailing the storage, handling, and land application of livestock wastes. Such plan shall be reviewed and approved in accordance with the following guidelines:

1. CFO's and CAFO's shall follow all IDEM rules/regulations. CFO's and CAFO's shall submit a copy of the approved IDEM application with all attachments. Additionally, CFO's and CAFO's shall submit required spreading acreage mapped with sensitive areas identified. Sensitive areas shall include residential zones, surface waters and waterways, natural wetlands, groundwater recharge areas, and tile drainage inlets. Copies of signed agreements, if necessary, shall be included;

2. All AFOs, CFOs and CAFOs, applying liquid manure to a surface, other than a hayfield or a pasture, within a one-half (1/2) mile of a residential zone shall inject liquid manure or incorporate surface applied liquid manure within 24 hours. Application of all liquid manure to any hayfield or pasture within 200 feet of any residence, business, church, or school shall be done by injection or incorporation, unless the applicant and the owner(s) of the affected residence, business, church or school agree to a lesser distance and record a copy of such agreement in the Office of the LaGrange County Recorder.

Application of all liquid manure to a surface, other than a hayfield or pasture, within 1000 feet of any residence, business, church or school shall be done by injection or incorporation, unless the applicant and the owner(s) of the affected residence, business, church or school agree to a lesser distance and record a copy of such agreement in the Office of the LaGrange County Recorder;

(2) Residential Uses

(a) Dwelling Units

(i) Every dwelling unit shall be set on a permanent ground-set foundation which shall include an exterior wall of stone, concrete, brick, or masonry product. Manufactured mobile homes measuring less than 23 feet wide for 60 % of its length (commonly referred to as a single wide mobile home) are exempt from this requirement, except as specifically provided otherwise in this Ordinance.

(ii) Residential dwelling units shall be used only as living quarters and shall not be used for business purposes except for home-based businesses meeting the standards of this ordinance.

(iii) The dwelling shall be at least 23 feet wide for 60% of its length.

(iv) Except as allowed in Article 3 Temporary Uses, Section (N), in the event that the home does not meet the above width criteria, the unit shall only be considered in the A-1 zoning district and adjoining property owners within 300' of the perimeter of the property must be notified and unanimously agree to the placement of the unit by signed affidavit. In the event that the above unanimous agreement is not obtained, the applicant must apply for BZA approval before placing the home.

(v) In areas where sanitary sewers are not available, no building permit shall be issued for a residence unless the LaGrange County Health Department has issued a conditional certificate indicating that a septic permit can be issued for the dwelling.

(b) Farm Worker Housing

(i) Farm worker housing is permitted only on lots or parcels that contain at least 25 acres.

(ii) Farm worker housing shall be used exclusively as seasonal living quarters for farm laborers.

(iii) All private living quarters constructed, renovated, or used for sleeping purposes in migrant labor camps and residential migrant housing shall provide a minimum of 50 square feet for each occupant. In a room where workers cook, live, and sleep a minimum of 100 square feet per person shall be provided.

(iv) Farm worker housing that is not used for 3 consecutive years shall be removed.

(c) Boarding or Rooming House

(i) No separate structures, garages, or outbuildings shall be used as boarding rooms.

(ii) Bathroom(s) and kitchen shall be accessible without exiting the dwelling and re-entering through another door.

(iii) Parking shall comply with Article 5, Section B.

(3) Business and Industrial Uses

General Business and Industrial uses shall comply with all applicable state and federal laws and county regulations governing such uses and shall also submit a Development Plan, pursuant to the requirements set forth in this Ordinance at Article 5, Section F, to the LaGrange County Planning and Zoning Department for review and determination by the LaGrange County Plan Commission. Additionally, any use which includes any of the activities listed below are subject to Development Plan submission to the LaGrange County Planning and Zoning Department for review and determination by the LaGrange County Plan Commission:

- Manufacturing or production
- Employment of 3 or more employees; other than the owner;
- Business hours outside of normal Monday – Friday daylight hours;
- Building(s) in excess of 5,000 square feet, to include, but not limited to, pre-existing buildings used for the current general business or industrial use; or
- Outside storage or display of goods

Notwithstanding the foregoing provision of this Ordinance, the Zoning Administrator shall have the authority to issue a Zoning Compliance Certificate for construction of an improvement in an Agricultural and Residential District, without the prior submission and approval of a development plan under the following circumstances:

- The proposed improvement would not have a significant impact upon adjacent land uses, and upon the street system and utility

and storm drainage facilities which serve the real estate on which the improvement is to be located; and

- The public convenience and welfare would not be substantially served by requiring submission and approval of a development plan for the proposed improvement.

In carrying out their authority under this Section, the Zoning Administrator may:

- Impose conditions, which must be satisfied by the applicant for the permit before issuance of it;
- Determine that the applicant must submit a development plan to the Commission in accordance with the normal requirements of this Ordinance; or
- Issue the permit without exception or condition.

If the Zoning Administrator imposes conditions for issuance of a Zoning Compliance Certificate, and the applicant disagrees with those conditions, the applicant shall submit a development plan to the commission for approval in accordance with the normal requirements of this Ordinance. Such consideration shall not be considered an appeal.

(a) Bed and Breakfast Use

(i) There shall be a maximum of five guest rooms in a bed and breakfast use.

(ii) In A-1 districts, there shall be one off-street parking space for each guest room plus two off-street parking spaces for the owners or operators of the bed and breakfast use.

(iii) Breakfast shall be served only to guests staying on the premises, not to the general public.

(iv) Bed and breakfast uses may offer occasional special events only if the BZA grants a conditional use permit for such uses. The permit shall state the limitations and requirements relating to the use.

(b) Home-based Business

(i) Home-based businesses meeting the criteria below are permitted in any residential dwelling and do not require a permit or zoning compliance certificate:

A.) The primary use of the property is residential, and the operator of the home-based business resides in the dwelling unit.

B.) The operator of the home-based business does not employ for the business anyone not residing on the premises.

C.) There are no structural additions, enlargements or exterior alterations to accommodate the home-based business or which change the residential appearance to a business appearance.

D.) The business is conducted entirely within the residence and not in any accessory building.

E.) There is no additional and separate entrance incongruent with the residential structural design for the purpose of conducting the home-based business.

F.) There is no display of goods, signs, or other external evidence of the home occupation.

G.) There are no clients or customers who come to the premises for the purpose of patronizing the home-based business.

(ii) Home-based businesses meeting the criteria below are permitted but require a zoning compliance certificate. Examples of such businesses include but are not limited to music instruction, tax preparation, financial planning, insurance sales, sewing and tailoring, and repairs of small items.

A.) There shall be no more than one nonresident person engaged on the premises in the operation of the business at any one time.

B.) There shall be no more than four clients, customers, or students at the premises at any one time for a purpose associated with the home-based business.

C.) If the home-based business is located in an accessory building, such building shall be of a type and size consistent with other accessory buildings in the neighborhood. No accessory building shall be constructed for the purpose of housing a home-based business.

D.) The business shall be conducted entirely within enclosed buildings, with the exception of seasonal outdoor instruction such as tennis or swimming lessons for no more than four students at any one time.

(c) Farm-based Business

(i) If wholesale or retail sales are involved, the total footprint of all buildings used for farm-based businesses on any lot or parcel shall not exceed 10,000 square feet.

(ii) If wholesale or retail sales are involved, there shall be no more than 3 buildings used for farm-based businesses on any lot or parcel.

(iii) No more than 3 acres of land shall be devoted to farm-based business use including but not limited to areas used for structures, parking, storage, display, setbacks, and landscaping.

(iv) The owner or occupant of the farm must be engaged in the farm-based business. A maximum of 3 employees will be permitted outside of the owner.

(v) Off-street parking for customers and employees shall be provided in accordance with Article 5, Section B. If the operator of the business provides an affidavit stating that employees do not require parking, the staff shall permit an equivalent reduction in the required parking spaces. Any parking demands not consistent with the affidavit shall be considered to be a violation of this Ordinance.

(d) Kennel

Outdoor runs or any other facility not within an enclosed building shall be set back at least 200 feet from each property line abutting a residential district or an institutional use, and, at least 50 feet from any other property line.

(4) Institutional Uses

(a) Religious Facility

A dwelling unit may be used on an occasional or regular basis as a religious facility.

(b) Park or Recreational Facility

A park or recreational facility that is approved as part of a subdivision plat does not require Board of Zoning Appeals approval but instead is subject to any conditions imposed by the Plan Commission as part of the subdivision approval.

(5) Sand and Gravel Extraction

(a) All sand and gravel operations shall comply with the standards set forth in the most recent edition of Guiding Principles of the Environmental Stewardship Council, published by the Indiana Mineral Aggregates Association.

(b) Sand and gravel operations are prohibited in urban area as defined by Indiana State Law.

(D) Business Use Table

Table 3-D-1

BUSINESS USE TABLE P=Permitted by Right C=Conditional Use						
Use Category	**Specific Use**	**Zoning Districts**				**Additional Regulations**
		B-1	**B-2**	**B-3**	**B-4**	
Residential	1-family Dwelling		P		P	Art. 3 – Sec. (C)(2)(a)
	2-family dwelling		P		P	Art. 3 – Sec. (C)(2)(a)
	Multifamily dwelling	P	P	C	C	Art. 3 – Sec. (C)(2)(a)
	Rooming or boarding house				C	Art. 3 – Sec. (C)(2)(c)
Business	Agribusiness	P	P	P	P	
	Automobile body shop	P		P		
	Automobile service	P	P	P		
	Big box retail	P		P		
	Business service	P	P	P	P	
	Campground or RV Park	C		C		Art. 5 – Sec. (G)(5)
	Clinic	P	P	P	P	
	Commercial center	P	P	P	P	
	Commercial recreation	P	C	P	C	
	Convenience store	P	P	P	P	
	Drive-in establishment	P	P	P	P	
	Drive-through establishment	P	P	P	C	Art. 3 – Sec. (E)(4)
	Farmers Market	P	P	P	P	
	Garden center	P	P	P	P	
	Gasoline station	P	P	P	P	
	General retail	P		P	P	
	Hotel and motel	P	P	P		
	Mini-warehouse	P		P		
	Outdoor retail sales	P		P		
	Personal services	P	P	P	P	

BUSINESS USE TABLE P=Permitted by Right C=Conditional Use						
Use Category	**Specific Use**	**Zoning Districts**				**Additional Regulations**
		B-1	**B-2**	**B-3**	**B-4**	
	Professional office	P	P	P	P	
	Retail services	P	P	P	P	
	Veterinary clinic	P	P	P	P	
	Cemetery					
	Hospital	C	C	C	C	
Institutional	Nursery school	P		P	P	
	Personal care	P	P	P	P	
	Private park or recreational facility	P	P	P	P	
	Private school	P	P	P	P	Art. 3 – Sec. (C)(4)(b)
	Public building or use	C	C	C	C	
	Public park or recreational facility	P	P	P	P	
	Public school	P	P	P	P	Art. 3 – Sec. (C)(4)(b)
	Religious facility	C	P	C	P	
		P	P	P	P	Art. 3 – Sec. (C)(4)(a)

(E) Use Specific Standards Business Districts

(1) Development Plans

All development in business districts is subject to Development Plan approval, as provided in Article 5, Section F.

(2) Residential Uses

In districts permitting both residential and business uses, the two uses may be located in the same building.

(3) Outdoor Storage

All materials shall be stored within buildings or screened from view.

(a) In the B-2 and B-4 Districts, there shall be no outdoor storage of equipment or goods. Outside display of items for sale is permitted,

provided that such display does not block public sidewalks and does not occupy an area greater than 5% of the floor area of the building.

(b) In the B-1 and B-3 Districts, outdoor storage is permitted provided that the storage area is screened with an opaque fence or landscaping. Opaque fencing shall be composed of wood, masonry, or an equivalent synthetic material. Chain link fences with opaque slats are not permitted.

(c) In the B-1 and B-3 Districts, outdoor display and sales of merchandise is permitted, provided that the display and sales area is approved as part of the Development Plan required under Article 5, Section F.

(4) Drive-Through Windows

Drive-through windows are permitted in business districts only if the drive-through arrangement is approved as part of the Development Plan required under Article 5, Section F.

(F) Industrial Use Table

Table 3-F-1

INDUSTRIAL USE TABLE P = Permitted by Right C = Conditional Use				
Specific Use	**Zoning Districts**			**Additional Regulations**
	I-1	**I-2**	**I-3**	
Agribusiness	P	P		
Business use	C	C	C	
Canning, bottling, or processing	C	P	C	
Dyeing or cleaning	C	P		
Freight services or truck terminals	C	P		
Junkyard		C		
Laboratory	P	P		
Lumber or storage yard	C	P	C	
Manufacturing	P	P	P	
Printing, lithography	P	P	P	
Utility plants or substations	P	P	P	
Warehousing or distribution center	P	P	C	

INDUSTRIAL USE TABLE P = Permitted by Right C = Conditional Use				
Specific Use	**Zoning Districts**			**Additional Regulations**
	I-1	**I-2**	**I-3**	
Welding, electroplating	C	P	C	
Wholesaling	C	P	C	
Private park or recreational facility	P	P	P	Art. 3 – Sec. (C)(4)(b)
Public park or recreational facility	P	P	P	Art. 3 – Sec. (C)(4)(b)
Other institutional use	C	C	C	

(G) Use Specific Standards for Industrial Districts

(1) Development Plans

All development in industrial districts is subject to Development Plan approval, as provided in Article 5, Section F.

(2) Storage

(a) All materials shall be stored within buildings or screened from view.

(b) Outdoor storage is permitted provided that the storage area is screened with an opaque fence or landscaping. Opaque fencing shall be composed of wood, masonry, or an equivalent synthetic material. Chain link fences with opaque slats are not permitted.

(c) Outdoor display of and sale of products is permitted, provided that the display and sales area is approved as part of the Development Plan required under Article 5, Section F.

(d) Junkyards shall be screened from view from all streets and all neighboring properties. Screening shall include an opaque fence that is at least 6 feet and not more than 9 feet high. No materials or objects shall be displayed or stored outside of the fence, and no materials or objects shall extend above the fence.

(3) Environmental Requirements

Industrial uses shall comply with all federal, state, and local environmental regulations.

(H) O-1 Overlay District

The standards in this section apply to all development within the O-1 Overlay District, in addition to all other applicable standards of the underlying zoning district. Where conflicts exist between the underlying district regulations and those contained in this section, this section shall apply. The Overlay District shall extend 660' from the centerline of SR 9 from County Road 200 North to County Road 400 North and County Road 600 North to the State Line. No new residential uses will be permitted except in U-1 and S-1 zones. The requirements of the O-1 district shall not apply to existing single-family dwellings, manufactured homes, and two – family dwelling units that are used for residential purposes, however they will be deemed non-conforming after the adoption of this ordinance. Existing residential uses that are partially or fully destroyed by fire or natural disaster may be repaired or rebuilt as a matter of right and consistent with Article 6, Section 5 of this zoning ordinance if such use is non-conforming. Site plan review will be required as regulated in Article 5, Section F of this ordinance.

.

(1) Lot Size

Unless the land is platted and developed as a planned industrial park, the minimum lot size in the O-1 District shall be 2 (two) acres for industrial use and 1 (one) acre for business use. When the development is serviced by sanitary sewer, lot sizes may be reduced in half.

(2) Landscaping

Site alteration should be kept to a minimum in order to preserve existing features such as high quality tree, natural drainage patterns, etc. Where possible, these features should be incorporated into the overall site design. A general landscaping plan is required which shall contain shrubs or a combination of shrubs, berms and groundcover.

(3) Setbacks

Setbacks from county, state or federal roads shall be in accordance with Article 4(A) (2). A well landscaped buffer of thirty (30) feet between commercial/industrial and residential uses should be provided.

(4) Access

After the effective date of this Ordinance, any lot subdivided in the 0-1 District that is to have direct access from SR 9 shall follow the table below:

Table 3-H-1

DESIRABLE UNSIGNALIZED ACCESS SPACING AS A FUNCTION OF POSTED SPEED	
Posted Speed (MPH)	**Feet**
25	130
30	185
35	245
40	300
45	350
50 and above	455

(5) Parking

Parking areas may be shared by adjacent businesses, provided that the total number of spaces meets the standards of this ordinance and easements or other permanent provisions are made to ensure that the parking will be shared in perpetuity.

(6) Signage

Signs along the corridor should be regulated in order to provide essential information to approaching motorists/pedestrians and to complement the character of the corridor. The size of signs should be in proportion to the associated development and its location along the corridor. Natural colors and materials that match an area's design theme or a building should be encouraged.

Main Identification Signs shall be located as close as possible to the main entrance serving the development. The sign should also be monument style with a decorative base matching the building or theme.

(I) O-2, Scenic Corridor Overlay District

The standards in the section apply to all development within the O-2, Scenic Overlay District, in addition to all applicable standards of the underlying zoning district. Where conflicts exist between the underlying district regulations and those contained in this section, this section shall apply. The O-2 Scenic Overlay District shall include all areas designated on the LaGrange County Future Land Use Map set forth in the LaGrange County Comprehensive Plan, excluding those areas that are designated herein under Article 3, Section (H) as being contained within the O-1 Overlay District. The O-2 Scenic Overlay District shall extend 660' from the centerline of the roads in the district. Only landscaping, access and utilities will be allowed within 100' of the Toll Road

right-of-way. Site Plan review will be required as regulated in Article 5, Section F of this ordinance.

(1) Lot Size

Commercial or Industrial Uses shall follow the same guidelines as stated in the O-1 district.

(2) Residential Uses

Setbacks from county, state or federal roads shall be in accordance with Article 4 (A) (2).

(3) Platting New Lots

Strip development is not permitted to provide for safe access to individual homes.

(4) Signs

Signage shall follow the same guidelines as stated in the O-1 District.

(J) Small Wind Energy Conversion Systems (SWECS)

The standards in this section apply to all SWEC development. The underlying district zoning regulations apply, however, where conflict exists between the underlying district regulations and those contained in this section, this section shall apply.

(1) A SWECS is permitted in all zoning districts, as an accessory use.

(2) Accessory Use. A SWECS may be installed as an accessory use to a primary use. No SWEC shall be installed on any property without the existence of a primary use.

(3) Minimum Lot Size, Maximum Height. The minimum lot size, the maximum number of SWEC's on a lot or parcel, and the maximum height of a SWECS shall be as specified in Table 3-J-1 below:

Table 3-J-1

District	Minimum Lot/ Parcel Size	Maximum number of SWECS	Maximum Height
Agriculture	1 acres	1	140'
	5 acres	2	140'
	10 acres	3	140'
S-1, U-1, L-1	1 acre	1	100'
	10 acres	2	100'
Business	1 acre	1	140'
Industrial	1 acre	1	140'
	5 acres	2	140'

(4) Height. The height of a SWECS shall be measured from one foot (1') above ground level to the highest extension of the blade, rotor, or vane. The minimum distance between the ground and the blade, rotor, or vanes shall be ten feet (10'), as measured at the lowest point of the arc of the blade, rotor or vane.

(5) Noise. SWECS shall not exceed 60 decibels (db), as measured at the closet property line. However, the 60 db standard may be exceeded during the short-term events such as utility outages and/or severe windstorms.

(6) Survival Speed. SWECS shall be rated by the manufacturer as having a minimum survival wind speed of 100 miles per hour.

(7) Setback. The minimum setback of a SWECS shall meet all of the following, measured from the edge of the support tower:

(a) 1.1 times the height of the tower from public parks, public open space, public greenways, historic preservation districts, streams, and rivers, measured from the nearest property lines, district lines, and/or the top of any stream or river bank;

(b) 1.1 times the height of the tower from the nearest occupied off-site structure;

(c) Ten feet (10') from any side and rear property line. Any property line adjacent to a street shall be deemed a front yard, and meet the setback requirements in Table 4-A-1 herein;

(8) Abandonment. A SWECS that is out of service for a continuous 24-month period will be deemed to have been abandoned, and shall be removed. Maintenance events which require extended periods of time beyond a twenty-four (24) month period shall be brought to the attention of the Building Department;

(9) If, after construction, the Owner or Operator receives a written complaint related to interference with local broadcast residential television, telecommunication, communication on microwave transmissions, the Owner or Operator shall promptly resolve the complaint.

(K) Wind Energy Conversion Systems (WECS) – Overlay District

The standards in this section apply to all WECS development. The underlying district zoning regulations apply, however, where conflicts exist between the underlying district regulations and those contained in this section, this section shall apply

(1) A Commercial Wind Energy Conversion System (WECS) and WECS Overlay District within the County shall meet the following standards:

(a) An Application for Re-zoning to a WECS Overlay District must be submitted to the Advisory Plan Commission and may be a combined application provided all property owners where the WECS facilities are to be located are Co-Applicants. The application shall include the following items:

(i) A general description of the project including its approximate nameplate generating capacity, the potential equipment manufacturer, the type of WECS, the number of WECS Towers, the nameplate generating capacity of each WECS Tower, the maximum height of WECS Towers, the maximum diameter fo the WECS rotors, the general means of interconnecting with the electrical grid and the general location of the project;

(ii) A description of the Applicant, Owner, and Operator, including their respective business structures;

(iii) A description of substations, maintenance structures, storage yards, permanent meteorological towers and equipment, and other buildings that are a direct functional part of the WECS. These structures, within the proposed overlay district, shall be considered accessory uses;

(iv) The names, addresses and phone numbers of the Applicants, Owners and Operators, and all Co-Applicants;

(v) A topographic map of the project site and surrounding area which shall encompass an area at least a quarter mile radius from the proposed project site with contours of not more than ten (10') intervals.

(2) Following the creation of a WECS Overlay District, an applicant and property owner that desires to construct, install, operate, repair, and maintain WECS shall first file or submit to the Advisory Plan Commission a Development Plan as specified in Article 7 of the LaGrange County Zoning Ordinance. The Development Plan shall specifically include the following:

(a) A site plan at an appropriate scale showing (standard sheet of 36 inches by 24 inches and a typical individual tower site at not greater than 1 inch equals 20 feet) the proposed location of the Wind Energy Conversion System Facility (including locations of each WECS Tower, guy lines and anchor bases (if any); WECS

access roads; substations; maintenance structures; storage yards; permanent Meteorological Towers; electrical cabling; ancillary equipment; and any other structures that are a direct functional part of the WECS. Each tower and/or structure should be assigned a unique identification number on the site plan. In addition, the site plan shall show; primary structures within one quarter mile of a WECS; property lines, including identification of adjoining properties; setback lines; public roads; County regulated drains, open ditches, or tiles; location of all above-ground utility lines within a distance of two (2) times the WECS Tower Height of any WECS Tower; location of all existing underground utility lines associated with the WECS site; recognized historic or heritage sites as noted by the Indiana Department of Natural Resources; floodplains; and any wetlands based upon a delineation prepared in accordance with the applicable U.S. Army Corps of Engineer requirements and guidelines. This site plan must also be distributed to the Emergency Management Agency, any Fire Departments serving any part of the site, and to the County Sheriff.

(b) A Transportation Plan (as defined) recommended by the Highway Superintendent and approved by the LaGrange County Commissioners.

(c) A Drainage Plan approved by the LaGrange County Drainage Board. The Transportation Plan and/or the Drainage Plan shall establish that the proposed WECS, including access roads, shall not impede the flow of water and will comply with the County Drainage Ordinance. At the discretion of the Advisory Plan Commission, approval of the Drainage Plan by the LaGrange County Drainage Board may be a condition of Development Plan Approval, which condition must be satisfied prior to application for an Improvement Location Permit.

(d) Projected Sound Emissions Study (as defined) for the proposed WECS.

(e) The applicant shall solicit input from the Indiana Department of Natural Resources on bird and bat migration, nesting, and habitat studies and shall follow any required protocols established, adopted, or promulgated, by the Department. The Applicant shall submit any response received from the Department of Natural Resources to the Advisory Plan Commission.

(f) A Decommissioning Plan formulated by the Applicant, Owner and/or Operator and accepted by the Advisory Plan Commission designed to ensure that the WECS Project is properly decommissioned. The Decommissioning Plan must be updated and approved by the Advisory Plan Commission every five (5)

years after the approval of the initial Decommissioning Plan, in the same manner as the initial plan. The Decommissioning Plan shall include assurance that the facilities are properly decommissioned upon the end of the project life or facility abandonment. The Applicants' obligations with the Plan shall include:

(i) Removal of all physical material (with the exception of Subsurface Collectors (as defined)), pertaining to the project improvements to a depth of not less than 48" beneath the soil surface;

(ii) Restoration of the area occupied by the project improvements such that the area is suitable for an equivalent land use to what existed immediately before construction of such improvements;

(iii) A cost estimate for demolition and removal of the WECS facility prepared by a reputable and licensed professional engineer approved by the Advisory Plan Commission. Financial assurance of decommission shall be provided as required by Section K, Paragraph 10, "post-construction and continued maintenance requirements".

(g) A Security and Safety Plan that must include adequate provisions for site security and safety during pre-construction, construction, and post-construction. If the plan includes using County Services, then it should include signatures indicating those parties are aware of their role and capable of performing it.

(h) Adequate assurance of the completion and continued operation of the WECS project from the date of the commencement of construction through the 10th year of operation of the WECS. The Owner/Applicant/Operator shall demonstrate such adequate assurance of completion and continued operation of the WECS project by providing evidence of (1) adequate funding of one hundred percent (100%) of the estimated cost of construction of the WECS; (2) performance and payment bonds or other sureties from the Owner Applicant/Operator and/or major equipment suppliers and contractors; (3) the existence of written warranties from contractors and/or major equipment suppliers and contractors; (4) the existence of written warranties from contractors and/or manufacturers which have demonstrated financial ability to repair and/or replace defective work, materials, and equipment; and (5) adequate casualty, builders risk, business interruption, and liability insurance for the replacement of the WECS and the individual components thereof, and the funding of an ongoing basis, and the payment of all liabilities occurring during, arising from, or related to a casualty loss. The

Applicant/Owner/Operator may provide such cost estimates, bids, contracts, warranties, feasibility studies, engineering studies and reports, insurance certificates, loan and other financing commitments at the discretion of the Advisory Plan Commission.

(i) An Economic Development Agreement (as defined) approved by the LaGrange County Commissioners. This agreement must be developed in conjunction with the LaGrange County Economic Development Corporation and LaGrange County Council. At the discretion of the Advisory Plan Commission, the approval of the Economic Development Plan by the LaGrange County Commissioners may be a condition of Development Plan Approval, which condition must be satisfied prior to application for an Improvement Location Permit.

(j) Any and all other information deemed necessary by the LaGrange County Plan Commission for the administration and enforcement of this Ordinance.

(3) After the Development Plan approval is obtained, but before any construction commences or Improvement Location Permits may be acquired, all applicable state and federal permits, approvals and licenses must be obtained and all state and federal statutes and regulations must be compiled with and the following requirements satisfied:

(a) The Owner or Operator of the WECS shall have obtained and maintained during construction and operation of the WECS facility a current general liability policy covering bodily injury and property damage that names the Property Owner(s) and LaGrange County as additional insured parties with limits of at least $2 million per occurrence and $5 million in the aggregate, with a deductible of no more than $20,000.

(b) The Applicant/Owner/Operator shall establish a 24-hour toll-free phone number for the registering of complaints and concerns during construction only. This number shall be posted at every road intersection throughout the project area before Improvement Location Permits are issued and before any construction or earth moving can commence. If legitimate complaints are not remedied within 48 hours the county may address these complaints with any expenses incurred to be reimbursed by the WECS Applicant according to the fee rate established by the Advisory Plan Commission.

(c) The Applicant/Owner/Operator must attend a Pre-Construction Meeting between the Advisory Plan Commission Executive Director, Advisory Plan Commission President, LaGrange County Building Inspector, and any other public officer or official whose

input is deemed appropriate and WECS Applicant to verify that all requirements in the Zoning Ordinance have been met. This meeting shall take place as the final step before construction and all other requirements have been met, whereby if all of the Zoning Ordinance requirements have been met, whereby if all of the Zoning Ordinance requirements have been met, then the WECS Applicant may proceed to obtain Improvement Location Permits. If any requirements have not been met then further preconstruction meetings will be held until it can be verified that the identified issues have been resolved.

(d) Improvement Location permit fees must be paid for any proposed construction element of the WECS project before the applicable Improvement Location Permits will be issued.

(4) The Re-zoning Application, Development Plan (including but not limited to Decommissioning Plan and each update thereof and the assurance of completion and continued operations), and Improvement Location Permit applications shall be reviewed by Advisory Plan Commission staff, counsel, an independent professional engineer, and any other professionals deemed necessary as selected or approved by the Advisory Plan Commission. Within 30 days of submission, the Owner/Applicant/Operator shall reimburse the Advisory Plan Commission for all costs and expenses associated with the initial or any subsequent review of the Development Plan including but not limited to the employment of a professional engineer, financial consultant, or other professional advisors consulted by the Advisory Plan Commission. A professional Engineer shall also certify, as part of the Improvement Location Permit application that the foundation and tower design of the WECS is within accepted professional standards, given local soil and climate conditions.

(5) Prior to and during construction the Applicant, Owner and Operator shall be responsible for:

(a) Implementing reasonable dust control measures during construction.

(b) Complying with existing septic and well regulation as required by the LaGrange County Health Department and the Indiana Department of Public Health.

(c) Repairing all damages to non-co-applicant or County regulated waterways, drainage ditches, field tiles, or any other infrastructures caused by the construction or maintenance of the WECS. Damage must be completely repaired to original or better condition, and so as not to impede the flow of water. All repairs must be completed in a timely manner and the WECS Owner,

Operator and/or Applicant shall be responsible for loss or damage proximately resulting from its impairment of such drainage structures. All repairs to county regulated drainage structures must be completed within ten (10) days unless a waiver is obtained from the County Drainage Board.

(d) Using concrete armoring techniques at each and every location where County regulated drains and subsurface power transmission lines of any type cross. Unopened bags of premixed concrete shall be laid on top of the transmission lines to cover six inches on both sides of the line and eight feet to each side of the County regulated drain the line is crossing. Open drain and transmission line intersections where the line is below the invert of the open drain shall be armored using the same technique. Red warning tape (printed with "warning electrical line below" or similar language) shall be buried no closer than 12 inches above the actual power line at all crossing locations. The Surveyor or agent designated by the Surveyor shall inspect every such crossing before backfilling. Concrete armoring techniques will not be required in cases where directional boring is used.

(e) Installing permanent, visible markers where directional boring is used. Markers shall be placed within the line of sight indicating directional changes and borings.

(f) Submitting a daily plan of work detailing where construction and transportation activities will occur to the Advisory Plan Commission, County Highway Superintendent, County Sheriff, County Surveyor, Soil and Water Conservation District, the Superintendent(s) of the School District(s) in areas in which construction is occurring and to the Emergency Services with jurisdiction over the areas in which construction is occurring. This shall include notification of any oversize or overweight loads entering or exiting the project each day as well as any work, roads, drainage, or access roads.

(g) The LaGrange County Highway Superintendent shall conduct a preconstruction baseline survey to determine existing road conditions for assessing potential future damage. The LaGrange County Highway Superintendent may choose to require remediation of road damage during or upon completion of the project and is authorized to collect fees for oversized load permits. If the Applicant does not make repairs in a timely manner, the Superintendent is authorized to make repairs and charge the Applicant a fee to cover the costs of repair. Such fees shall be established at the start date of construction and may be revised at three-month intervals. Further, a corporate surety bond shall be required by the LaGrange County Highway Superintendent to insure the County that future repairs are completed to the

satisfaction of the County. The cost of bonding is to be paid by the Applicant. A $1,000 fine shall be assessed for each occurrence where WECS oversize or overweight construction and maintenance equipment utilizes any routes in violation of the approved Transportation Plan. If the Applicant/Owner/Operator or its contractors require material changes from the approved Transportation Plan or if post completion repairs, improvements, or expansions require oversize and overweight loads or involve new routes, an Amended Transportation Plan must be approved in the same manner as the initial plan. When all road repairs are completed to his satisfaction the LaGrange County Highway Superintendent will issue a County Highway Remediation Release Form.

(h) Adhering to the approved Development Plan, any non-material proposed changes, modifications, or amendments to the Development Plan must be approved by the Executive Director of the Advisory Plan Commission. All material changes to the Plan must be approved by the Advisory Plan Commission. The Executive Director shall have the authority and discretion, considering all relevant factors, to determine whether the proposed Development Plan change is material.

(6) Design and installation shall conform with the following:

(a) WECS Towers shall conform to applicable industry standards. Applicant shall submit certificates of design compliance that wind turbine manufacturers have obtained from Underwriters Laboratories, Det Norske Veritas, Geranishcher Lloyd Wind Energie, or an equivalent third party.

(b) All WECS Towers shall be installed with a tubular, monopole type tower. Meteorological towers may be guyed. All structures shall be uniform in design and appearance.

(c) All WECS Towers shall be equipped with a redundant braking system. This includes both aerodynamic over-speed controls (including variable pitch, tip, and other similar systems) and mechanical brakes. Mechanical brakes shall be operated in a fail-safe mode. Stall regulation shall not be considered a sufficient braking system for over-speed protection.

(d) All electrical components and Collectors (as defined) of the WECS shall conform to applicable local, state, and national codes, and relevant national and international standards. All WECS Collectors between WECS towers shall be located underground. Said electrical components and Collectors between each WECS and/or on-site substations may be located above ground where burial presents a technical or practical difficulty, such as a deep

ravine or significant waterway. Once the technical or practical difficulty is traversed, burial shall be required per the standards noted above.

(e) Towers and blades shall be painted with non-reflective white color. The Applicant shall comply with all applicable Federal Aviation Administration color requirements. No advertising or signage shall be allowed on a WECS Tower, except for manufacturers name on the nacelle.

(f) A visible warning sign concerning voltage must be placed at the base of all pad-mounted transformers and substations.

(g) All WECS Tower designs must include features to deter climbing or be protected by anti-climbing devices such as: 1) fences with locking portals at least eight feet high, 2) anti-climbing devices 15 feet vertically from the base of the WECS Tower, and/or 3) locked WECS Tower doors.

(h) Red strobe lights are preferred during the night to reduce impacts on migrating birds and red pulsating incandescent lights and white lights should be avoided, if possible. All lighting shall also be in compliance with applicable Federal Aviation Administration regulations and further lighting requirements contained within this Ordinance. All lighting shall be shielded so that no glare extends substantially beyond the boundaries of the wind farm facilities.

(7) At any non-Co-Applicant residentially used structure or residentially zoned lot, public school, or public library, for a period of more than 10% out of every hour, the audible A-weighted sound pressure levels as a result of the sound emitted by the WECS shall not exceed either, the greater of 45 decibels or, 5 decibels above the Ambient Baseline Sound Pressure Level of the wind farm project area at Critical Wind Speeds. At any non-Co-Applicant residence on Industrial, or Business zoned land, for a period of more than 10% out of every hour, the audible A-weighted sound pressure levels as a result of the sound emitted by the WECS shall not exceed either the greater of 51 decibels or, 5 decibels above the Ambient Baseline Sound Pressure Level, if used, shall be determined by a baseline acoustic emissions study conducted by the LaGrange County Advisory Plan Commission and funded by the Applicant. All methods for measuring precision described in the International Electrotechnical Commission IEC 61400-11 Standard; *Wind turbine generator systems – Part 11: acoustic noise measurement techniques.* Noise and vibration levels shall also be in compliance with all other applicable County, State and Federal regulations.

(8) The minimum distance between the ground and any protruding blade(s) utilized on a WECS shall be fifty (50) feet, as measured at

the lowest point of arc of the blades. The minimum distance shall be increased as necessary to provide for vehicle clearance in locations where over-sized vehicles might travel.

(9) Setbacks shall be as follows:

(a) No WECS shall be constructed in any setback, dedicated public easement or dedicated public right-of-way without prior written authorization from the County.

(b) Except as provided herein, installation of any WECS may not be nearer than 1.1 times the height of the WECS including the blade at its highest point, to any non-Co-Applicant property lines, dedicated roadway, Co-Applicant residences, railroad right-of-way or overhead electrical transmissions or distribution lines. Also, the minimum setback distances for all turbines, substations, maintenance structures, storage yards, permanent Meteorological Towers, and other buildings that are a direct functional part of the WECS shall not be less than 1000 feet from any non Co-Applicant residence or public building. Distance shall be measured at the time of application for Improvement Location Permit from the center of the foundation at the base of the tower. New structures built adjacent to wind power facilities shall maintain the same minimum setback requirements. The setback distance will be followed except in specific instances allowed by the Board of Zoning Appeals in a Variance Hearing.

(c) The WECS Tower shall not be nearer than 1.1 times the height of the WECS Tower including the blade at its highest point from any other WECS Tower.

(10) Post Construction and continued maintenance requirements are as follows:

(a) Commencing on January 1st of the first calendar year after the tenth (10th) year of operation of the WECS, the Owner/Applicant/Operator shall secure and provide to the Advisory Plan Commission a performance bond, surety bond, letter of credit, or other form of financial assurance that is acceptable to the Advisory Plan Commission (the "Decommissioning Security") equal to the estimated cost of decommissioning the WECS pursuant to the Decommission Plan. The Decommissioning Security, in computing the estimated cost of decommissioning, shall consider and deduct the Net Salvage Value (as defined) of the WECS. The amount of the Decommissioning Security shall be adjusted annually by January 31 by an amount equal to the increase in the CPI index. "CPI Index" shall mean the Consumer Price Index for "All Urban Consumers, U.S. City Average, All items, "issued by the Bureau of

Labor Statistics of the United States Department of Labor, or, if discontinued or no longer published, such other governmental index that most closely matches the manner in which inflation had been previously tracked as selected by the Advisory Plan Commission. All Applicants/Owners/Operators shall provide and updated Decommissioning Plan every five (5) years commencing with the operation of the WECS which updated Decommissioning Plan shall be reviewed and approved by a licensed engineer approved by the Advisory Plan Commission and qualified to provide an estimate of the cost of decommissioning of the WECS and the Net Salvage Value of the WECS (the "Decommissioning Engineer"). A new Decommissioning Security in an amount equal to the cost of the estimated cost of decommissioning after deducting the Net Salvage Value of the WECS shall be provided within sixty (60) days of the approval of the updated Decommissioning Plan.

(b) All solid waste whether generated from supplies, equipment, parts, packaging, or operation or maintenance of the facility, including old parts and equipment, shall be removed from the site in a timely manner. All hazardous waste generated by the operation and maintenance of the facility, including but not limited to lubricating materials, shall be handled in a manner consistent with all local, state and federal rules and regulations.

(c) The following operation, maintenance and inspection standards shall be met:

(i) Any physical modification to the WECS that alters the mechanical load, mechanical load path, or major electrical components shall require re-certification. Like-kind replacements shall not require re-certification. Prior to making any physical modification (other than like-kind replacement), the Owner or Operator shall confer with the Building Inspector to determine whether the physical modification requires re-certification;

(ii) The LaGrange County Building Inspector, approved designees, along with licensed 3rd party engineers/professionals retained by the County for the specific purpose of conducting inspections of the WECS shall have the right, at any reasonable time and with sufficient prior notice, to accompany the Owner or Operator, or his agent, on the premises where a WECS has been constructed, to inspect all parts of said WECS installation and to require that repairs or alterations be made. The Owner or Operator of a WECS may retain a licensed 3rd party professional engineer familiar with WECS systems to

prepare and submit to the LaGrange County Building Inspector a written report which addresses the repairs or alterations requested, and which suggest alternate methods for addressing the concerns or provides evidence that said repairs or alterations are unnecessary, within thirty (30) days after receiving notice from the LaGrange County Building Inspector that repairs or alterations are requested, or within a longer period of time mutually acceptable to both parties. The LaGrange County Building Inspector will consider any such written report and determine whether the repairs or alterations should be made as originally requested or as suggested in the written report. In the event of a dispute between the LaGrange County Building Inspector and the Owner or Operator, or a 3rd party professional engineer retained by them, as to the repairs or alterations which are required, the decision of the Building Inspector shall be final;

(iii) If, after construction, the Owner or Operator receives a written complaint related to interference with local broadcast residential television, telecommunication, communication or microwave transmissions, the Owner or Operator shall promptly resolve the complaint;

(iv) The WECS Applicant, Owner or Operator shall submit to all providers of emergency services serving the WECS Project area a copy of the as-built site map. Upon request by the local fire department, the Owner or Operator shall cooperate with the local fire department to develop the fire department's emergency response plan. Nothing in this section shall alleviate the need to comply with all other applicable fire laws and regulations;

(v) On completion of construction the WECS Applicant, Owner or Operator shall submit to the County Surveyor a site map detailing all ground disturbed through construction activity, surface/subsurface structure/infrastructure and all routes over which trucks and equipment traveled. The scale and format of the submitted map shall conform to the County Surveyor's specifications;

(vi) For the period of three (3) years following the completion of construction the WECS Applicant, Owner or Operator shall be liable to the county for all costs or repair, as determined by the County Surveyor, to county for all costs of repair, as determined by the County Surveyor, to county drain tiles, regulated drains and ditches and other county regulated

surface and subsurface structures and private tiles located in the public right of way within fifty (50) feet of the routes and disturbed ground, unless it can be reasonably demonstrated that such damage to said tiles, drains, ditches, and/or structures was not caused by activities associated with the WECS construction and/or operation.

(d) A WECS or any individual wind turbine constituting a portion of the WECS is presumed at the end of its useful life and/or abandoned if the WECS or the individual turbine generates no electricity for a continuing period of (12) months. This presumption may be rebutted by submitting to the Advisory Plan Commission for approval and within (90) days of submission obtaining approval thereof of a plan outlining the steps and schedules for returning the WECS or the individual wind turbine to service. Any WECS or individual turbine which pursuant to the terms hereof has either reached the end of its useful life and/or is abandoned pursuant to the terms hereof shall be subject to removal pursuant to the Decommissioning Plan.

(e) Any WECS, WECS Tower, or structure thereof declared to be unsafe by the LaGrange County Building Inspector by reason of inadequate maintenance, dilapidation, obsolescence, fire hazard, disaster, damage or abandonment is hereby declared to be a public nuisance and shall be abated by repair or rehabilitation within 12 months or be deemed abandoned and at the end of its useful life as provided in this Section.

(f) Any post-construction proposed non-material modifications, alterations, expansion, or changes of any type or size to the Development Plan must be approved by the Executive Director of the Advisory Plan Commission and all material post construction proposed changes must apply in the same way as a new WECS following the process set forth herein. The Executive Director shall have the authority and discretion, considering all relevant factors, to determine whether the proposed post-construction change is material.

(g) Nothing in this section of this Ordinance is intended to preempt other applicable state and federal laws and regulations.

(11) All new building lots and new dwellings approved in the Wind Energy Conversion System Overlay district shall submit and record a signed agreement in the office of the County Recorder. Such written agreement shall recognize that the current owner and all subsequent owners of such building site (lot) shall not object to, nor file suit against any Wind Energy Conversion System so long as it follows industry accepted wind farming operation, construction, and maintenance standards. Such agreement language shall be

approved by the Board Attorney and shall be comparable to the following: "In accepting this deed, grantees do hereby acknowledge that the surrounding land is designated for a Commercial Wind Energy System and subject to intense wind farming practices; and grantees, and their heirs, assigns, and successors in interest, are precluded from complaining, seeking damages and/or attempting to enjoin the use of the property (land) for Wind Energy Conversion Systems as long as industry accepted wind farming operation, construction and maintenance standards are followed. It is further recognized that Wind Energy Conversion Systems may include disruptive noise/traffic throughout the year. This condition and agreement shall run with the land.

(L) Planned Unit Development District

Planned Unit Development Districts may have any uses or combination of uses permitted under the ordinance establishing the PUD. PUDs shall be classified as residential, business, industrial, or mixed use, depending upon the uses to be permitted in the development. Only those uses shown on the approved PUD shall be permitted; all other uses are prohibited.

(M) Accessory Uses

(1) Purpose

Accessory uses shall be permitted in all zone districts in accordance with the Sections of this Ordinance. In order to further the objectives of the Comprehensive Plan, to promote public safety and general welfare, and to encourage the development and maintenance of attractive residential, commercial, industrial, and open space areas, limitations are placed on the nature, bulk, height, extent, and placement of accessory uses.

(2) General Requirements

Accessory uses shall meet the following criteria:

(a) The use shall be Incidental and subordinate to and commonly associated with the operation of the primary use of the lot.

(b) An accessory use shall be operated and maintained under the same ownership or control and on the same lot as the primary use. When a platted lot or other lot described by deed as a single parcel is interrupted by a right-of-way, the principal building and accessory building may be on noncontiguous parcels, provided

that the parcels would be contiguous if the right-of-way were disregarded. Such parcels may not be sold separately but shall in perpetuity be considered as single lots, unless they are subdivided through the platting process in accordance with the LaGrange County Subdivision Control Ordinance.

(c) Accessory uses shall be clearly subordinate in height, area, bulk, extent and purpose to the primary use served.

(d) Accessory uses shall not be established prior to the primary use, unless a temporary permit is obtained in accordance with Article 3, Section L

(3) Permitted Accessory Uses

(a) Accessory Use Tables

The accessory uses shown on the tables below are permitted as indicated, subject to the additional provisions and limitations contained in this section.

(i) Agricultural and Residential Districts

Table 3-K-1

PERMITTED ACCESSORY USES AGRICULTURAL AND RESIDENTIAL DISTRICTS P = Permitted				
Specific Use	**Zoning Districts**			
	A-1	**S-1**	**U-1**	**L-1**
Accessory apartment	P	P	P	P
2nd dwelling unit	P			
Garage, carport	P	P	P	P
Patio, canopy, deck, porch	P	P	P	P
Parking space for RV or commercial vehicle	P	P	P	P
Cabana, bathhouse, playhouse, storage shed	P	P	P	P
Greenhouse	P	P	P	P

PERMITTED ACCESSORY USES AGRICULTURAL AND RESIDENTIAL DISTRICTS P = Permitted				
Specific Use	**Zoning Districts**			
	A-1	**S-1**	**U-1**	**L-1**
Guesthouse	P	P		
Play equipment, doghouse, gazebo, and similar	P	P	P	P
Swimming pool, tennis court	P	P	P	P
Amateur radio antenna	P	P	P	P
Stable (private)	P			
Stable (commercial)	P			
Apartment management office, laundry, exercise facility, and similar			P	
Sign	P	P	P	P
Small Wind Energy Conversion Systems (SWECS)	P	P	P	P
Solar Panel Array	P			

(ii) Business Zoning Districts

Table 3-K-2

PERMITTED ACCESSORY USES BUSINESS DISTRICTS P = Permitted				
Specific Use	**Zoning Districts**			
	B-1	**B-2**	**B-3**	**B-4**
Enclosed storage	P	P	P	P
Outdoor storage	P		P	
Caretaker dwelling	P		P	
Drive-through window	P	P	P	C

PERMITTED ACCESSORY USES BUSINESS DISTRICTS P = Permitted				
Specific Use	**Zoning Districts**			
	B-1	**B-2**	**B-3**	**B-4**
Other uses customarily associated with and subordinate to any permitted use	P	P	P	P
Small Wind Energy Conversion Systems (SWECS)	P	P	P	P

(iii) Industrial Zoning Districts

Table 3-K-3

PERMITTED ACCESSORY USES INDUSTRIAL DISTRICTS P = Permitted			
Specific Use	**Zoning Districts**		
	I-1	**I-2**	**I-3**
Enclosed storage	P	P	P
Outdoor storage	C	P	C
Caretaker dwelling	P	P	P
Retail or wholesale sales of company products	P	P	P
Office	P	P	P
Other uses customarily associated with and subordinate to any permitted use	P	P	P
Small Wind Energy Conversion Systems (SWECS)	P	P	P

(b) Accessory Use Standards

(i) All accessory uses shall comply with the setback requirements of this ordinance, unless the use is listed as exempt.

(ii) In residential districts, garages and carports shall be used only for the storage of vehicles and equipment that are clearly incidental and subordinate to the residential use. In these districts, open off-street motor vehicle parking and

loading areas are permitted, provided, that not more than one such space shall be provided for a commercial vehicle of more than three-ton manufacturer's rating.

(iii) No more than 2 recreational vehicles may be stored in the open. In districts allowing residences, recreational vehicles stored in the open must be placed in a side or rear yard.

(iv) In the S-1, U-1, and L-1 Districts, greenhouses shall not be larger than 200 square feet in area and shall not be used for commercial purposes.

(v) Amateur radio sending and receiving antennae, including masts, shall not exceed 100 feet measured from finished lot grade.

(vi) Signs shall comply with the requirements of Article 5, Section D.

(vii) Swimming pools shall comply with all Indiana safety regulations.

(viii) Apartment management offices and other facilities normally associated with tenants' convenience shall be only for the use of residents of the multifamily complex. There shall be no exterior display, and the facilities shall not be available to the general public.

(N) Temporary Uses

(1) Permitted Uses

Temporary uses are permitted, subject to the time limits and regulations contained in this section. Permitted temporary uses include those listed below.

(a) Manufactured home as a temporary residence to house person in need of care on the same lot with another dwelling. The manufactured home must be located in the side or rear yard, and it must be used either as a residence for a person acting as a care-provider for someone living in the other dwelling unit, or by a person who is being cared for by someone living in the other dwelling unit on the parcel. At least one of the occupants must be over the age of 65, or in ill health or at a level of dependency where on-site care is necessary, as certified by a physician. After a two-year period, the petitioner must update documentation of the continuing medical condition to staff. The manufactured home must be removed as soon as it is no longer needed for the care arrangement. Such manufactured home shall have an approved

sewage disposal system and be provided with perimeter skirting manufactured for the specific use.

(b) Manufactured home including single wide homes without neighbor notification as temporary housing while a permanent dwelling is being constructed, reconstructed, or undergoing a major renovation, for a maximum of two years.

(c) Temporary office, model home or model apartment and incidental signs thereof, both incidental and necessary for the sale, rental or lease of real property in the zone district for a maximum of 18 months.

(d) Construction of an accessory structure prior to the primary use, only if a building permit has been issued for the principal use. The maximum time the accessory structure may be used prior to issuance of a certificate of occupancy for the principal use is 6 months.

(e) Noncommercial concrete batching plant incidental and necessary to construction, for a maximum of 18 months.

(f) Temporary building or yard for construction materials and equipment, both incidental and necessary to construction for a maximum of 18 months.

(g) Special event (such as a festival or carnival) for a maximum of 30 days.

(h) Bazaars, rummage or garage sales and similar temporary uses, for a maximum of 10 days in any calendar year.

(i) Sale of Christmas trees or other seasonal items for a maximum of 60 days.

(j) Parking of recreational vehicles in agricultural or residential areas for visitation for a maximum of 15 days. Parking of such vehicles for short-term occupancy in non-residential districts is prohibited.

(k) Construction trailers as a temporary office during the period of construction and development.

(l) A recreational vehicle may be used for a public health program sponsored by a public health department; a program sponsored by any other unit of government; or a carnival or other public affair or function authorized by proper authority.

(m) Other similar uses deemed temporary by the Board of Zoning Appeals and attached with such time period, conditions and safeguards as the Board may deem necessary.

(2) Standards, Prohibitions and Restrictions

(a) Adequate access and off-street parking facilities shall be provided, and the use shall not interfere with traffic movement on adjacent streets.

(b) No public address systems or other noise producing devices shall be permitted in a residential district. These systems are permitted for auctions in any district where auctions are permitted.

(c) Any floodlights or other lighting shall be directed upon the premises and shall not be detrimental to adjacent properties.

(d) The lot shall be put in clean condition, devoid of temporary use remnants upon termination of the temporary period.

(O) Adult Businesses

(1) Prohibitions

No adult entertainment business shall be established within 1,000 feet of any religious facility, school, day care facility, park or recreational use, residential zone or agriculture zone.

(2) Conditional Uses

Adult entertainment uses are permitted as a conditional use only in the I-2 District.

(3) Exterior Display

No adult entertainment business shall be conducted in any manner that permits the observation of any material depicting, describing or relating to Specified Sexual Activities or Specified Anatomical Areas as defined in this Ordinance by display, decorations, sign, show window or other opening from any public right-of-way.

(P) Towers and Similar Structures

Towers and similar structures, other than Small Wind Energy Conversion Systems (SWECS) and Wind Energy Conversion Systems (WECS) towers and structures, shall be regulated as set forth below. These standards shall be interpreted and enforced in a manner consistent with the Telecommunications Act of 1996. Towers installed by a unit of government are exempt from the provisions of this Section

(1) Location

(a) Self-supporting towers (without guy wires) more than 100 feet and less than 180 feet tall shall be situated on the site to self-contain all debris resulting from tower failure. In all cases, the tower shall be located no closer to the lot line than 25 percent of the tower

height or the setback requirement in Article 4, whichever is greater. In the event that the self-supporting tower is located contiguous to a residential parcel, the tower shall be set back from the lot line a distance equal to the height of the tower.

(b) All guy mast towers and self-supporting towers greater than 180 feet shall be situated on the site to self contain all debris resulting from tower failure. In all cases, the tower shall be located no closer to the lot line than 66 percent of the tower height plus 25 feet. Also, in all cases, the guy wire anchors shall be located a minimum of 25 feet from the lot line or the prevailing yard requirement, whichever is greater.

(c) To protect from falling ice or parts, guyed towers shall be located a minimum of 1.25 feet for every foot of height from any public road right-of-way, residentially used parcel or home, occupied building, recreational field or playground. The Plan Commission may apply the criteria in this subsection to other structures or land if determined necessary to safeguard human life.

(d) Towers greater than 180 feet in height shall be located a minimum distance of 1,500 feet from any residential subdivision.

(e) The height of tower apparatus shall not be utilized in determining the setbacks required by this section. All tower apparatus shall be securely fastened to minimize noise emissions or damages from falling. Towers of 180 feet or less shall not exceed a total height of 200 feet, including attached tower apparatus.

(2) Maintenance

(a) All towers and sites shall be properly maintained and shall be kept in a condition as not to become a public nuisance or eyesore. Proper maintenance shall include but not be limited to regular lawn and landscaping care, painting of an accessory building, fences, and tower. Additionally, the site shall be kept free of junk and trash.

(b) Any tower declared to be a public nuisance due to poor maintenance, noise emissions, or other situation shall be a violation of this Ordinance.

(3) Co-location, Use, and Documentation

(a) An application for a permit to erect a tower must include documentation showing that there is a need for tower space in the area of the proposed tower. New towers shall not be constructed except upon a showing of significant need.

(b) The applicant shall have the burden of proving significant need by a preponderance of the evidence showing that the following criteria are met:

(i) The proposed tower will replace an existing similar (i.e., height and other characteristics) tower in the County that has been or will be removed.

(ii) The proposed additional antennas cannot be placed on existing towers.

(iii) Existing towers in LaGrange County cannot be re-engineered to accommodate additional antennas.

(iv) Existing towers cannot be extended to accommodate additional antennas.

(v) Another communication technology in lieu of towers with antennas is not available.

(vi) A site containing an existing tower cannot accommodate an additional tower.

(vii) A new tower application shall demonstrate need for a minimum of two antenna arrays, which shall be included in the tower application.

(viii) An applicant for a new tower shall provide space for use by any unit of government at no cost.

THIS PAGE IS INTENTIONALLY LEFT BLANK

Article 4: Dimensional Standards

(A) Dimensional Standards

(1) Water Bodies

In all zoning districts, except L-1, the minimum setback from any river, lake, or water body exceeding one acre in total area shall be 75 ft.

(2) Front Setbacks

Minimum front setback distances shall be in accordance with the table below, except as provided in Article 5, Section B. All distances shall be measured from the center line of road.

(3) Agricultural Zone

In Agricultural zones the roadside setback for all commercial construction shall be 125 feet from the center line of the County road. Commercial construction roadside setbacks from State Highways shall be the greater of, 125 feet from the center line of the road or 60 feet from the State Highway right of way line.

Table 4-A-1

MINIMUM FRONT SETBACK DISTANCES (Feet)					
Zoning District	**Arterial**	**Major Collector**	**Minor Collector**	**Local**	**Subdivision**
A-1	110	85	85	80	45
S-1	100	75	60	50	45
U-1	85	65	65	35	40
L-1	100	75	60	50	45
B-1	100	75	65	60	45
B-2	90	65	55	50	40
B-3	100	70	55	50	50
B-4	80	60	40	None	None
I-1	110	85	65	35	35
I-2	125	85	80	50	50
I-3	110	85	65	50	50
O-1	125	85	80	80	45

O-2	110	85	80	80	45

(4) Agricultural Dimensional and Intensity Standards

(a) Agricultural Dimensional and Intensity Standards Table

Table 4-A-2

AGRICULTURAL DIMENSIONAL AND INTENSITY STANDARDS					
Minimum Lot Dimensions		**Minimum Setbacks (feet)**			**Max. Height (feet)**
Area (acres)	**Width (feet)**	**Front**	**Side**	**Rear**	
Residential Uses					
1 Not including the R/W	150	Art. 4 – Sec. (A)(2)	10	5	35
AFO					
N/A		125	100	100	35
New CFO					
30		200	200	200	35
New CAFO					
120		500	500	500	35
Farm-based Business					
5	150	Art. 4 – Sec. (A)(2)	10	5	35

(b) Additional Agricultural Standards

(i) New AFO's, shall be set back at least 500 feet from the boundary of any property zoned S-1, U-1, or L-1.

(ii) New CAFOs shall be set back at least 1,500 feet from any residence, other than that of the applicant, school, business, or church, and all new CFOs, CFO expansions, and AFO expansions to the extent the operation becomes a CFO, shall be set back at least 1,000 feet from any residence, other than that of the applicant, school, business, or church, and all new AFO's shall be setback at least 500 feet from any residence, other than that of the applicant, school, business, church, unless the applicant and the owner(s) of the affected residence agree to a lesser distance and record a copy of such agreement in the Office of the LaGrange County Recorder.

(iii) The livestock facilities of new CFOs shall be set back at least (1/2) mile from any property zoned S-1, U-1, or L-1 and shall be set back at least one-half (1/2) mile from any shoreline or water line of a lake.

(iv) The livestock facilities of new CAFOs shall be set back at least one-half (½) mile from any property zoned S-1, U-1, or L-1 and shall be set back at least one-half (1/2) mile from any shoreline or water line of a lake.

(5) Institutional Dimensional and Intensity Standards

Table 4-A-3

INSTITUTIONAL DIMENSIONAL AND INTENSITY STANDARDS						
Use	**Minimum Lot Dimensions**		**Minimum Setbacks (feet)**			**Max. Height (feet)**
	Area (acres)	**Width (feet)**	**Front**	**Side**	**Rear**	
Religious facility	3	300	Art. 4 – Sec. (A)(2)	10	15	40
Public school	10	400	Art. 4 – Sec. (A)(2)	25	25	40
Private school	2.5	150	Art. 4 – Sec. (A)(2)	10	5	35
Public park or recreational facility	2	150	Art. 4 – Sec. (A)(2)	10	15	40
Private park or recreational facility	As determined by BZA					

(6) Residential Dimensional and Intensity Standards

(a) Residential Dimensional and Intensity Standards Table

Table 4-A-4

RESIDENTIAL DIMENSIONAL AND INTENSITY STANDARDS									
Zoning District	**Specific Use**		**Minimum Lot Dimensions**		**Minimum Setbacks (feet)**			**Max. Height (feet)**	**Maximum Lot Coverage (%)**
			Area (square feet)	**Width (feet)**	**Front**	**Side**	**Rear**		
S-1	1-fam. dwelling	With sewer	15,000	100	Art. 4 – Sec. (A)(2)	15	10	35	40
		Without sewer	43,560	150		20	15		25
U-1	1-family dwelling		5,000	50	Art. 4 – Sec. (A)(2)	7	15	35	70
	2-family dwelling		7,000	60	Art. 4 – Sec. (A)(2)	10	15	35	70
	Multifamily dwelling		7,000 plus 1,500 per dwelling unit	75	Art. 4 – Sec. (A)(2)	20	20	35	60
L-1	1-family dwelling	With sewer	20,000	100	Art. 4 – Sec. (A)(2)	10	15	35	40
		Without sewer	43,560	150		20	20		

(b) Additional Residential Standards

(i) Any new residential use, other than that of the applicant, shall be set back a minimum of 1500 feet from the livestock facilities of any existing Confined Animal Feeding Operation (CAFO), 1000 feet from any existing Concentrated Feeding Operation (CFO), or 500 feet from any existing Animal Feeding Operation (AFO), unless the applicant and the owner(s) of the affected residence agree to a lesser distance and record a copy of such agreement in the Office of the LaGrange County Recorder.

(ii) In the L-1 District, the following setbacks apply to any properties having Lake Frontage.

(iii) The minimum setback from the mean high water line of the lake shall be 45 feet or the setback established for the zoning district, whichever is less.

(iv) Accessory buildings shall be no closer to the lake than any principal building within 300 feet.

(v) Accessory buildings 200 square feet or less in any side or rear yard shall have a minimum setback distance of 10 feet.

(vi) All fences in residential areas, except farm field fences, shall not exceed 48" in height in a front yard and 96" in a rear or side yard. In an L-1 Zone no fence shall exceed 48" in height.

(vii) Backlot Development

A.) New lakefront or backlot development including, but not limited to, lake front access point, lake front recreational areas, beaches, parks, playgrounds, regardless of whether such areas has been specifically identified as a common area or access point, whether located in a residential subdivision, apartment building development, condominium cooperative, neighborhood association, or associated with an organization, club, retirement community, mobile home park, mobile home subdivision, subdivisions (exempt or non-exempt) subject to the provisions of the subdivision control ordinance and multi-family dwelling units, mobile home parks, and campgrounds, mixed use development with a residential component, planned unit development with a residential component, residential development under the horizontal property regime, and platted or exempt residential subdivisions in all zoning districts shall comply with the following linear footage:

1.) 100 feet for the first residential unit;

2.) 50 feet for the second residential unit; and

3.) 20 feet for each additional residential unit.

B.) The developer of any property contiguous to a shoreline shall submit with its rezoning, special use, or development plan application a certified survey depicting the shoreline and calculating the shoreline length, and said application shall be granted only after such submission. Additionally, staff shall independently confirm the accuracy of said shoreline length calculation prior to the public hearing for or other determination of said application.

(7) Business Dimensional and Intensity Standards

(a) Business Dimensional and Intensity Standards Table

Table 4-A-5

BUSINESS DIMENSIONAL AND INTENSITY STANDARDS							
Zoning District	**Minimum Lot Dimensions**		**Minimum Setbacks (feet)**			**Max. Height (feet)**	**Max. Lot Coverage (%)**
	Area (square feet)	**Frontage (feet)**	**Front**	**Side**	**Rear**		
B-1	5,000	75	Art. 4 – Sec. (A)(2)	10	10	40	60
B-2	5,000	75	Art. 4 – Sec. (A)(2)	10	10	30	50
B-3	10,000	100	Art. 4 – Sec. (A)(2)	20	10	40	50
B-4	N/A	N/A	Art. 4 – Sec. (A)(2)	0	0	40	100

(b) Additional Business Standards

(i) Where a business property side or rear line abuts a property zoned or used for residential purposes, the minimum side or rear setback shall be 20 feet. Opaque fencing or landscaping shall be provided between the business and the residential property.

(8) Industrial Dimensional and Intensity Standards

Table 4-A-6

INDUSTRIAL DIMENSIONAL AND INTENSITY STANDARDS							
Zoning District	**Minimum Lot Dimensions**		**Minimum Setbacks (feet)**			**Max. Height (feet)**	**Max. Lot Coverage (%)**
	Area	**Frontage (feet)**	**Front**	**Side**	**Rear**		
I-1	20,000 square feet	100	Art. 4 – Sec. (A)(2)	15	15	45	75
I-2	1 acre	150	Art. 4 – Sec. (A)(2)	20	20	45	75

I-3	3 acres	150	Art. 4 – Sec. (A)(2)	20	20	40	75

(9) PUD Dimensional and Intensity Standards

Table 4-A-7

PUD DIMENSIONAL AND INTENSITY STANDARDS		
Type	**Minimum Acreage**	**Minimum Frontage**
Residential	20	50 ft.
Business	20	100 ft. on collector or higher
Industrial	200	100 ft. on collector or higher
Mixed Use	100	100 ft. on collector or higher

(B) Measurements

(1) Percentages and Fractions

When a measurement results in a fractional number or percentage, any fraction of ½ or less shall be rounded down to the next lower whole number and any fraction of more than ½ shall be rounded up to the next higher whole number. Any percentage of .5 or greater shall be rounded up to the next higher whole number and any percentage less than .5 shall be rounded down to the next lower whole number.

(2) Distances

(a) When a minimum distance between buildings or uses is specified, such distance shall be measured in a straight line without regard to intervening structures or objects, between the two closest lot lines of the properties in question.

(b) The distance between signs is measured between signs along the centerline of the road to which the sign is oriented.

(3) Lot Area

The lot area is the total area within the lot lines of a lot, excluding any street right-of-way but including any water features such as lakes, ponds, or streams.

(4) Sign Area

The total surface area of one sign face of freestanding signs, and projecting wall signs shall be counted as part of the maximum total surface area allowance. Sign area shall be measured by the smallest

square, circle, rectangle, or combination thereof that will encompass the entire sign area.

(5) Height

(a) Building Height

The height of a structure shall be measured from the average grade adjoining the walls of the structure to the average of the highest points of the roof surface of a flat roof; or to the deck line of a mansard roof; or the mean height level between eaves and ridge for a gable, hip or gambrel roof. (See Figures 4-B-1 and 4-B-2)

Figure 4-B-1
Average Grade

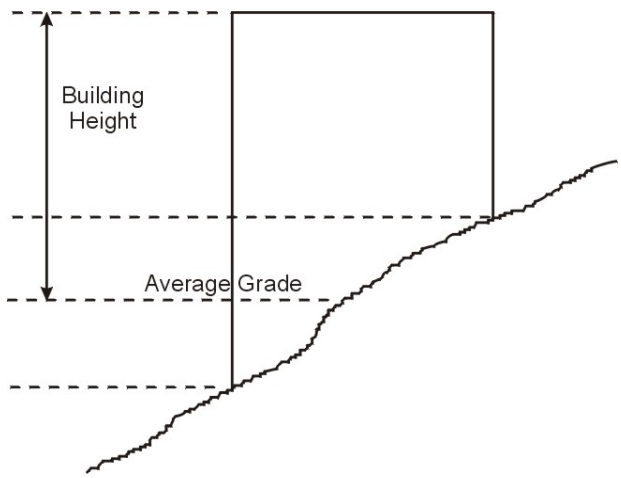

Figure 4-B-2
Roofs and Measurements

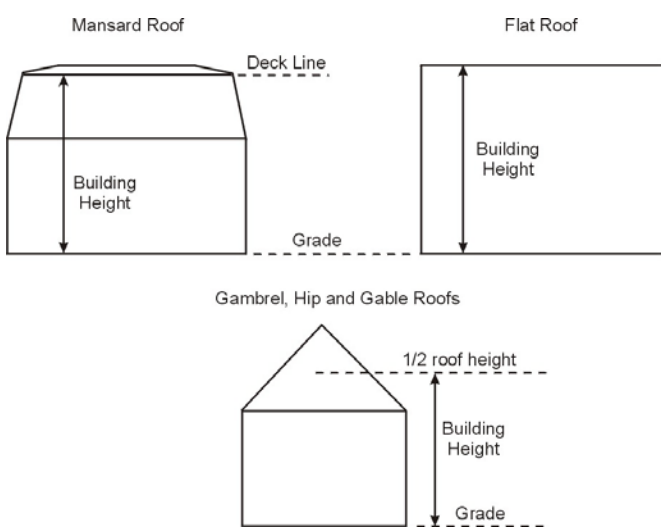

(b) Fence Height

Fence height shall be determined by measurement perpendicular from the level of the ground immediately adjacent to the exterior or interior walls of the fence. When measurement from the level of the ground on each of the exterior and interior walls of the fence are not equal, then the measurement shall be determined from the lowest level of the ground which is immediately adjacent to the exterior or interior wall of the fence.

(c) Exceptions

The following uses and structures are exempt from the height limitations of this Ordinance:

(i) Architectural projections, including but not limited to spires, steeples, belfries, parapet walls, cupolas, domes, flues, and chimneys

(ii) Special structures such as silos, windmills, elevator penthouses, gas tanks, grain elevators, observation towers, scenery lofts, heating and air conditioning equipment and necessary mechanical appurtenances, cooling towers, fire towers, ornamental towers, substations, and smoke stacks.

(iii) Towers and utility structures including but not limited to water towers, electric power and communication transmission lines. Wireless communication towers are regulated by Article 5, Section N.

(6) Setback

(a) Lot lines

Building setback shall be measured from a line drawn parallel to a lot line at a distance equal to the depth of the required yard setback. The distance shall be measured along a straight line drawn perpendicular to the lot line and the setback line. (See Figure 4-B-3). For front yards, setbacks are measured from the centerline of the adjacent street, as established by the Thoroughfare Plan adopted January 2004. Lots having more than one street frontage are considered to have a front yard for each such frontage.

Figure 4-B-3

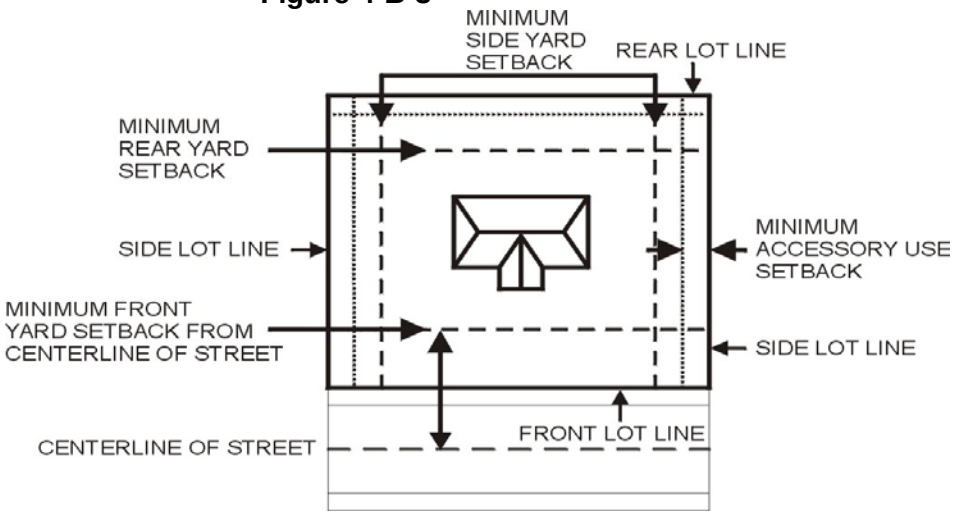

(b) Cul-de-sacs

The required setback on cul-de-sacs and curved streets shall be determined by measuring the required setback from the radius of the cul-de-sac resulting in a setback line that is parallel to the arc of the street right-of-way. (See Figure 4-B-4)

Figure 4-B-4

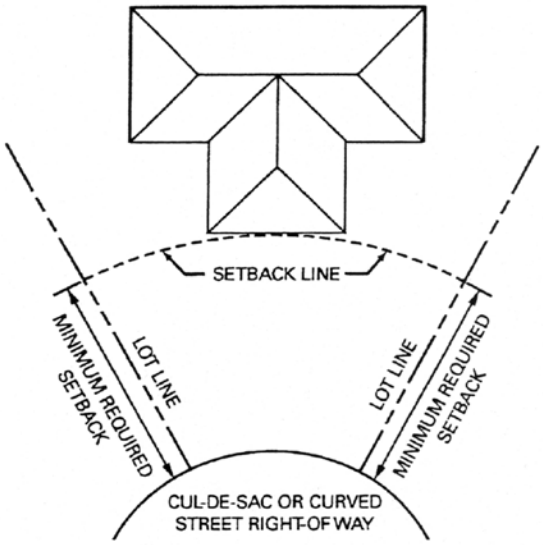

(c) Lake Frontage

Setbacks from lakes shall be measured from a line tangent to the mean high water line of the shore.

(d) Setbacks in Improved Areas

(i) For the purpose of this Section an improved area shall be defined as any block that contains at least three lots or

parcels, each containing a legally established building. For the purposes of this Section, a block consists of one side of the street, not interrupted by any streets. In any case where a proposed building site has no buildings within 500 feet in either direction on the same side of the street, the property shall be considered to be in an unimproved area.

(ii) Front setback lines for improved areas shall be in accordance with the setback distance already established. In any improved area, the minimum required building setback line for any new building or structure shall be the average of such established setback line, provided that such structure does not encroach into the right-of-way as established by the Thoroughfare Plan.

(iii) In improved areas in the L-1 District the minimum setback from the lake shall be the lesser of the setback required by the dimensional and intensity standards in Article 4, Section (A) (5) or the established setback, whichever is less. The established setback shall be the average setback of the three nearest principal buildings.

(iv) Such setback lines shall be as required in this Section with the following exceptions:

A.) Those encroachments listed in Article B, Section (B) (6) (e) are permitted.

B.) Where another section of this ordinance requires a larger setback, the higher or most restrictive requirement shall govern.

(v) Any street not designated on the thoroughfare plan of current adoption shall be assumed to be a local street designation for the purpose of determining the building setback line, unless the county highway engineer determines that a higher classification applies.

(vi) Private streets shall be considered to be local streets for the purposes of this Section.

(e) Exceptions

The following are permitted within the setback area:

(i) Incidental features such as birdbaths, lawn balls, and yard sculptures. Doghouses are permitted in the side or rear yard only.

(ii) Uncovered stairs, decks sized for entry purposes only, porches, landings, fire escapes, gutters, decks and awnings may project into any yard but not to exceed 6 feet and not closer than 5 feet to any lot line. In the L-1 District, on any

property having lake frontage, no structure that projects into a required yard area on the lake side of the property may be more than one foot above grade.

(iii) Architectural projections including, wing walls, belt courses, and bay windows may project into any yard, but such projection shall not exceed 3 feet.

(iv) Ornamental fences, walls and structural screens may be permitted in any required side or rear yard or setback distance, in accordance with the accessory structure height requirements of the respective zone district. Ornamental fences, walls and structural screens may be permitted in any required front yard in accordance with the accessory structure height requirements of the respective zone district; provided, that no fence, wall, or structural screen in a front yard toward which a structure is oriented may be allowed to exceed 48" in height.

(v) Nothing contained in this Section shall be deemed to prohibit the erection or maintenance of an open fence in connection with agricultural uses, recreation use or the public safety or a security fence in nonresidential districts.

(vi) The provisions of this Section shall not apply to retaining walls.

Article 5: Development and Design Standards

(A) General Standards

(1) Number of Uses per Lot

On each lot or parcel, only one principal use is permitted, together with permitted accessory uses. This restriction does not apply to uses permitted in conjunction with a Development Plan or Planned Unit Development. For purposes of this ordinance, a lot shall be a contiguous land area, not interrupted by any streets, railroads, rights-of-way, or water bodies.

(2) Intersection Visibility

(a) No fence, wall, hedge, tree, shrub, or other object which obstructs sight lines and elevations between 2½ and 8 feet above the street shall be placed, planted, or permitted to remain on any corner lot within the triangular area formed by the street right-of-way lines and a line connecting points 35 feet from the intersection of said street lines, or in the case of a rounded property corner, from the intersection of the street right-of-way lines extended.

(b) The same sight line limitations described above, shall apply to any area within 10 feet of the intersection of a street right-of-way line with the edge of any driveway pavement or alley line. No portion of a private driveway for a corner lot shall be permitted on dedicated rights-of-way within 70 feet of the centerline intersections of streets adjacent to the corner lot.

(3) Essential Services

Essential services shall be allowed in any district insofar as permitted, authorized, or regulated by law or other ordinance. The Zoning Administrator may permit buildings required in conjunction with an essential service. In granting such permission, the Zoning Administrator shall take into consideration the location, size, use, and effect such building will have on adjacent land and buildings. The decision of the Zoning Administrator may be appealed to the Plan Commission.

(4) Similar Uses

The staff is hereby authorized to determine the appropriate district for each use. Where a new use is not listed in the Ordinance, the staff shall identify the use that is most similar in operation and function and shall apply the regulations governing the similar use to the new use.

(5) Outdoor Storage of Vehicles and Materials

(a) The accumulation of solid waste outside of approved landfills is not permitted, with the exception of compost piles and materials defined as inert solid waste to be used during fill operations and not for long-term storage.

(b) Parking or outdoor storage of trucks and/or trailers over one ton rated capacity, step vans, cargo vans, buses, mobile homes, or manufactured units, except temporary parking for the delivery of goods and/or services, shall not be permitted on any lot smaller than two acres or in any platted residential subdivision.

(6) Noise

(a) Except in the A-1 district, no uses or activities shall create noise levels for more than 5 minutes in any hour that exceed those shown on the following table.

Table 5-A-1

MAXIMUM NOISE LEVELS			
Zoning Classification	Maximum Noise Level (dBA)		Maximum Nighttime Noise Level (dBA) 9 p.m. to 7 a.m.
	At Property Line	At Residential District Boundary	At Residential District Boundary
I-3	65	65	50
S-1, U-1	50		50
L-1	75		50
B-1, B-2, B-3, B-4	65	60	50
I-1, I-2	70	60	50
Mixed Use	65	60	50
Public/Institutional	65	60	50

(b) Noise that is produced for no more than a cumulative period of 5 minutes in any hour may exceed the above standards by a maximum of 5 dBA, except between the hours of 9 p.m. to 7 a.m.

(c) Noise that is produced for no more than a cumulative period of 1 minute in any hour may exceed the above standard by 10 dBA, except between the hours of 9 p.m. and 7 a.m.

(d) Mechanical and electrical equipment shall provide adequate shielding and baffling so that noise levels from such equipment will not exceed the above noise levels.

(e) Noise shall be measured with a sound level meter that meets the standards of the American National Standards Institute. Noise levels shall be measured in decibels on a sound level meter using the A-weighted filter network (dBA). Calibration checks of the instrument shall be made at the time any noise measurement is made.

(f) Occasional sounds generated by public safety vehicles, tornado warning systems, railroad equipment, and similar activities are exempt from these standards.

(7) Lighting

(a) General Provisions

No exterior lighting used for parking lots, signage, recreational facilities, product display, or security shall be permitted to spill over on operators of motor vehicles, pedestrians, and uses of land in the vicinity of the light source. These requirements shall not apply to lighting placed in a public right-of-way for public safety.

(b) Type

Shielded luminaries, or luminaries with cutoff optics, and careful fixture placement shall be required so as to facilitate compliance with this section.

(c) Orientation

Exterior lighting fixture shall be oriented so that the lighting element (or a transparent shield) does not throw rays onto neighboring properties. Light rays shall not be directed into street rights-of-way or upward into the atmosphere.

(d) Minimum Lighting Standards

All areas designated on approved site plans for vehicular parking, loading, or circulation and used for any such purpose after sunset shall provide artificial illumination in such areas at a minimum intensity of 0.4 foot-candles, exclusive of approved anti-vandal lighting. This standard shall not apply to properties in I-3, A-1, S-1, or L-1 districts. In the U-1 District, this standard applies only to nonresidential and multifamily housing uses.

(e) Flashing, Flickering, and Other Distracting Lighting

Flashing, flickering, and other distracting lighting that may distract motorists is prohibited. Strobe lights are permitted only when required by the Federal Aviation Administration.

(f) Nuisances

Lighting which creates or becomes a public nuisance is not permitted.

(g) Accent Lighting

Accent lighting and low voltage lighting (12 volts or less) is exempt from these requirements.

(h) Nonconforming Lighting

All lighting fixtures approved prior to the adoption of this Zoning Ordinance and that do not comply with the provisions of this Section are considered to be and regulated as legal nonconforming uses.

(B) Parking and Loading

(1) Purpose

Accessory off-street parking and loading facilities shall be provided and maintained for all buildings, structures or premises used in whole or in part for purposes permitted by this Ordinance. These regulations are designed to alleviate or prevent congestion of the public streets by establishing minimum requirements for on-site storage of motor vehicles in accordance with the use to which the property is occupied.

(2) Existing Uses

(a) No use lawfully established prior to the effective date of this Ordinance shall be required to provide and maintain the parking and loading requirements of this Ordinance;

(b) For any nonconforming use which is hereafter damaged or partially destroyed, and which is lawfully reconstructed, reestablished or repaired, off-street parking and loading facilities equivalent to those maintained at the time of such damage or partial destruction shall be restored and continued in operation; provided, that in no case shall it be necessary to restore or maintain parking or loading facilities in excess of those required by this Ordinance for equivalent new uses.

(c) When the intensity of use of any building, structure or premises shall be increased through the addition of dwelling units, floor area, beds, seating capacity or other unit of measurement, parking and loading facilities as required in this Ordinance shall be provided for such increase in intensity of use.

(d) Whenever the existing use of a building, structure or premises shall hereafter be changed or converted to a new use permitted by this Ordinance, parking and loading facilities shall be provided as required for such new use.

(e) Accessory off-street parking or loading facilities in existence on the effective date of this Ordinance shall not hereafter be reduced below, or if already less than shall not be further reduced below, the requirements for a similar new use under the Sections of this Ordinance.

(3) Location

(a) Accessory off-street parking and loading spaces shall be provided on the same lot as the use served, except as otherwise provided in this Ordinance, and may be situated as one or more individual areas.

(b) Residential Parking

(i) Front Yards

A.) Parking for single-family residential uses shall be prohibited within the setback between the street and the building except on a single driveway not exceeding the width of an attached garage facing the street or 22 feet in width where there is no attached garage facing the street. Parking on any other portion of the setback between the street and the building or on a lawn shall be prohibited. Parking shall not be permitted in driveways serving parking lots.

B.) Parking for multifamily residential uses shall be prohibited within the required street setback as set forth Article 4, Section (A) (2). Parking shall not be permitted in driveways serving parking lots. Parking shall be prohibited on lawns.

(ii) Side and Rear Yards

A.) Parking areas for single-family uses may occupy a maximum of 50% of the area extending from the rear of the principal structure to the rear lot line between side lot lines.

B.) The side and rear parking setback requirement for multifamily uses shall be 1/2 the building setback for the district or 5 feet, whichever is greater.

(c) Accessory off-street parking facilities for separate uses may be provided collectively if the total number of spaces so provided is not less than the sum of the separate requirements for each such use; provided, that all regulations governing location of accessory parking spaces, in relation to the use served, are adhered to; provided further, that no parking space or portion thereof shall serve as a required space for more than one use unless otherwise authorized by the Board.

(d) Accessory off-street parking facilities required in this Section shall be utilized solely for the parking of passenger automobiles or light trucks of less than one-ton capacity, of patrons, occupants or employees of specified uses. Such parking facilities shall not be used for the storage, display, sales, repair, dismantling or wrecking of any vehicle, equipment or material.

(4) Parking Standards

(a) The minimum size of a parking space may be altered based on aisle width and angle of parking. Parking stalls shall conform to the minimum standards set forth in Figures 5-B-1 and 5-B-2.

Table 5-B-1

Angle of Parking (degrees)	One-Way Maneuvering Aisle Width (Feet) "A"	Two-Way Maneuvering Aisle Width (Feet) "A"	Parking Stall Width (Feet) "B"	Parking Stall Length (Feet) "C"
0 º – Parallel	12	20	9	23
30 º – 53º	14	20	9	19
54 º – 75 º	18	22	9	19
76 º – 90 º	22	24	9	19

Figure 5-B-2

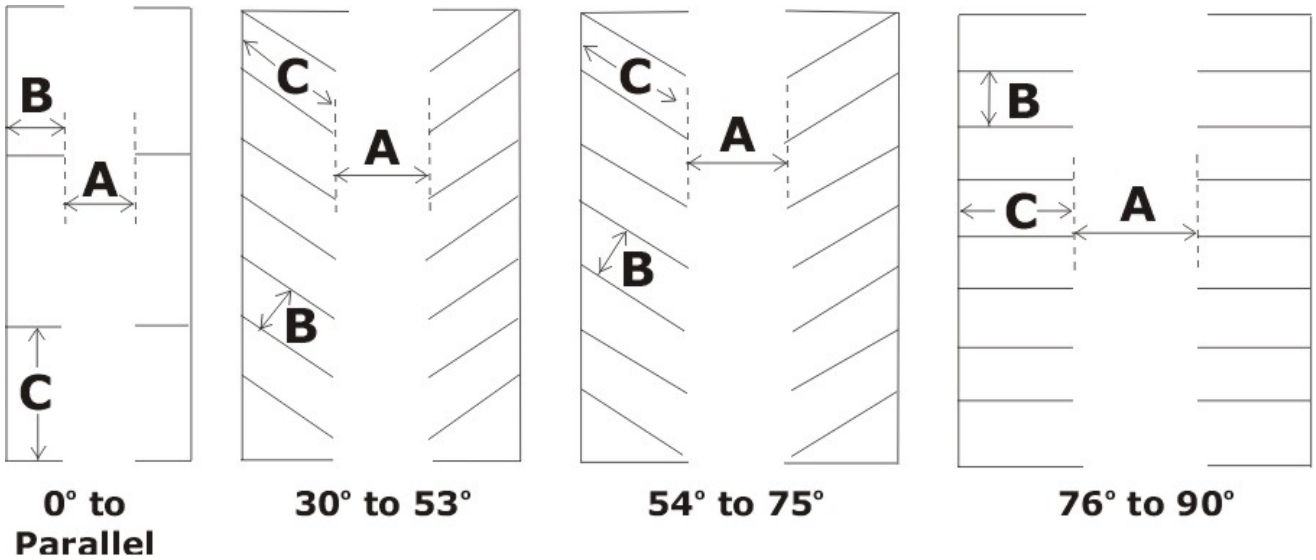

(b) Designated bus parking spaces shall be a minimum of 12 feet in width and at least 42 feet in length for angle parking and a minimum of 10 feet in width and 48 feet in length for parallel parking.

(c) Each required off-street loading space shall be of a size not less than that required for an off-street parking space but scaled larger for delivery vehicles expected to be used, logically and conveniently located for bulk pickups and deliveries, and accessible to such vehicles when required off-street parking spaces are filled.

(d) Except on lots occupied by one- and two-family dwellings, each off-street parking space shall open directly upon an aisle or driveway that meets the requirements established in Figures 5-B-1 and 5-B-2.

(e) All off-street parking or loading facilities shall be designed with appropriate means of vehicular access to a street or alley in a manner that least interferes with traffic movement.

(f) The minimum required number of off-street parking or loading spaces shall be calculated as follows:

(i) If the unit of measurement is any fraction of the unit specified in relation to the number of spaces to be provided, such fraction shall be considered as being the next unit and shall be counted as requiring one space.

(ii) In sports arenas, churches and other places of assembly in which patrons occupy benches, pews or other similar seating facilities, each 20 inches of such seating shall be counted as one seat for the purpose of determining requirements hereunder.

(iii) In the case of open floor areas used for temporary seating purposes, an area of 16 square feet usable for seating shall be counted as one seat for the purpose of determining requirements hereunder.

(iv) For uses involving more than one activity (i.e., manufacturing and office, office and retail, automobile service and convenience store), the requirements for each use shall be calculated separately and then aggregated.

(5) Minimum Off-Street Parking Space Requirements

(a) The minimum number of required off-street parking spaces shall be as indicated on the Table below.

Table 5-B-3

PARKING SPACE REQUIREMENTS		
Use		**Minimum Number of Required Spaces**
Agricultural Uses		No requirement, except for farm markets and other commercial or similar uses, when there shall be an adequate number of spaces to serve the public
Amusement Uses, including skating rinks video arcades, pool and billiard rooms, and similar facilities		1 space for each 500 square feet of gross floor area
Automobile Repair Uses, including muffler shops, tire shops, quick lubricating, and other similar uses		2.5 spaces for each service bay.
Bowling Alleys		4 spaces for each lane
Child Care Uses, including children's homes, day care centers, nurseries and kindergartens and similar uses		1 space for each 5 children
Commercial Centers	Less than 50,000 square feet	1 space for each 200 square feet of gross floor area
	50,000 square feet or larger	1 space for each 250 square feet of gross floor area
Community Center Uses, including clubs, lodges, community centers, libraries, museums and similar places of assembly		1 space for each 100 square feet of assembly area
Drive-through Uses (other than restaurants), including banks, dry cleaners, and similar uses		1 space for each 400 square feet of gross floor area, plus stacking spaces as required in Section (B) (8) below
Funeral Service		

PARKING SPACE REQUIREMENTS		
Use		**Minimum Number of Required Spaces**
Group Housing, including rooming and boarding houses, dormitories, fraternities and sororities, elderly housing, halfway houses, nursing homes and similar group quarters		1 space for each 35 square feet of seating area
Health Club Uses, including athletic clubs and spas		1 space for each 2 beds, sleeping units, rooming units or dwelling units plus 1 space for each 100 square feet of assembly or common area
Health Uses, including hospitals, in-patient clinics, and similar uses		1 space for each 400 square feet of gross floor area
Hotel Uses, including hotels, motels, apartment hotels and other facilities for the transient public		1 space for each patient bed
Higher Education Uses, including colleges, universities, professional schools, junior colleges, and vocational schools		1 space for each guest room
Industrial Uses, including manufacturing and similar uses, not catering to the retail trade		0.8 spaces for each student, based upon the maximum number of students attending classes on the premises during any 24-hour period. If the school provides on-site housing, this requirement may be reduced to 0.5 spaces for each student
Open Air Business Uses	Less than 3000 square feet	1 space for each 250 square feet of gross floor area
	3000 to 5000 square feet	1 space for each 500 square feet of gross floor area
	5001 to 10,000 square feet	1 space for each 750 square feet of gross floor area
	More than 10,000 square feet	1 space for each 1,250 square feet of gross floor area
Professional Office Uses		1 space for each 1,000 square feet of outdoor storage or display area
Religious Facility	Medical and Dental	1 space for each 200 square feet of gross floor area
	Other	1 space for each 300 square feet of gross floor area
Residential Uses	Place of worship	1 space for each 3 seats in the sanctuary
Restaurant Uses	Single-family or two-family	2 spaces per dwelling unit
	Multifamily	1.5 spaces for each one-bedroom or efficiency unit; 2 spaces for each 2-bedroom unit, plus 0.25 guest spaces per unit
Retail Uses	Drive-through or fast-food	1 space for each 75 square feet of gross floor area plus stacking spaces as required by Section (B) (8) below

PARKING SPACE REQUIREMENTS		
Use		**Minimum Number of Required Spaces**
	General	1 space for each 100 square feet of gross floor area
Schools	Furniture, appliances or other large consumer goods	1 space for each 500 square feet of gross floor area
	Convenience stores	1 space for each 200 square feet of gross floor area
	Other retail	1 space for each 250 square feet of gross floor area
Theater Uses, including auditoriums, movie theaters, performing arts facilities, and sports arenas	Elementary or middle school	3 spaces for each classroom
	High school	8 spaces for each classroom
Warehouse		1 space for each 4 seats
	Mini-warehouse	1 space for each 50 lockers
		1 space for each 750 square feet of gross floor area

(b) Uses Not Specified

For uses not specified in this Section or in such instance when the requirement for an adequate number of spaces is unclear, the number of parking spaces shall be determined by the Zoning Administrator on the basis of similar requirements, the number of persons served or employed and the capability of adequately serving the visiting public. Such determination may be reviewed by the Plan Commission or appealed to the Board of Zoning Appeals.

(6) Off-Site Parking Facilities

(a) Required off-street parking facilities shall be provided on site, except as provided in this Section.

(b) The Board is authorized to grant an off-site or shared parking facility as a conditional use.

(c) A site development plan for an off-site parking facility shall be filed with the Board as a required exhibit accompanying the conditional use petition and shall be made part of the conditions of any approval therefore. Such site development plan shall demonstrate

compliance with all applicable standards of this Ordinance and shall indicate:

(i) Adjacent streets, alleys and lots.

(ii) All individual primary uses to be served, including the location, use and number of parking spaces for each such use

(iii) A layout drawn to scale of aisles and driveways, entrances, exits and turnoff lanes, parking spaces, setbacks, drainage facilities and landscaping

(iv) Off-site parking facilities shall be encumbered by an instrument duly executed and acknowledged, which subject such accessory off-street parking facilities to parking uses in connection with the primary use served. Such instrument shall specify the time period. Such instrument shall be recorded in the applicable zoning compliance permit files of the Plan Commission, and placed of public record in the office of the County Recorder.

(d) In the B-4 District any or all of the parking may be off-site, provided that there are public parking lots available within 900 feet of the use to be served. On-street parking may be counted toward the parking requirements in this district.

(7) Loading Requirements

(a) Uses and buildings with a gross floor area of less than 5,000 square feet shall provide adequate receiving facilities, so as not to obstruct the free movement of pedestrians and vehicles over a sidewalk, street or alley.

(b) Uses and buildings with a gross floor area of 5,000 square feet or more shall provide off-street loading spaces in accordance with the following exhibit.

Table 5-B-4

LOADING SPACE REQUIREMENTS		
Use	**Floor Area (square feet)**	**Minimum Number of Loading Spaces**
Manufacturing, distribution, wholesaling, storage and similar uses	5,000 – 25,000	1
	25,001 – 60,000	2
	60,001 – 100,000	3
	Each additional 50,000	1
Office buildings, hotels, retail sales, commercial centers,	5,000 – 60,000	1
	60,001 – 100,000	2

hospitals, and similar uses	Each additional 100,000	1

(8) Vehicle Stacking Areas

(a) Number of Spaces

Vehicle stacking spaces shall be provided as specified in Figures 5-B-5 and 5-B-6 below:

Table 5-B-5

STACKING SPACES		
Activity Type	**Minimum Stacking Spaces**	**Measured From**
Bank teller lane	4	Teller or Window
Automated teller machine	3	Teller
Restaurant drive-through	6	Order Box
Restaurant drive-through	4	Order Box to Pick-Up Window
Car wash stall, automatic	6	Entrance
Car wash stall, self-service	3	Entrance
Gasoline pump island	2	Pump Island
Other	Minimum of 2 per window	

Figure 5-B-6

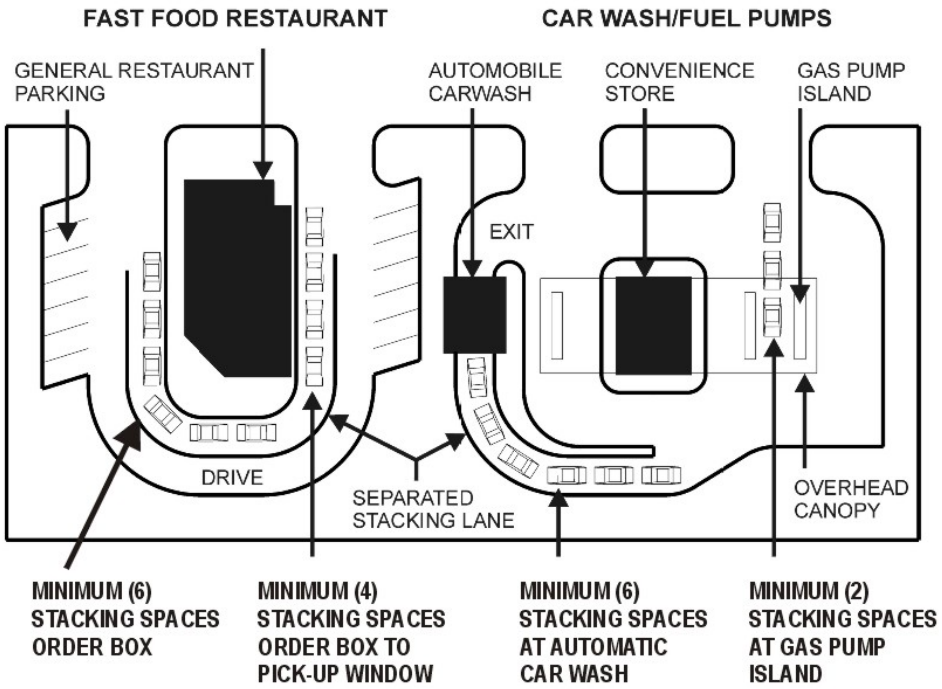

(b) Stacking Space Specifications

(i) Size

Stacking spaces must be a minimum of 8 feet by 20 feet in size.

(ii) Location

Stacking spaces may not impede on or off-site traffic movements or movements into or out of off-street parking spaces.

(9) Accessible Parking for Physically Challenged Persons

(a) A portion of the total number of required off-street parking spaces in each off-street parking area shall be specifically designated, located and reserved for use by persons with physical challenges.

(b) The minimum number of accessible spaces to be provided shall be a portion of the total number of off-street parking spaces required, as determined from the following exhibit. Parking spaces reserved for persons with physical challenges shall be counted toward fulfilling off-street parking standards. Spaces shall be provided in accordance with the table below.

Table 5-B-7

ACCESSIBLE PARKING			
Total Parking Spaces Provided	**Minimum Number of Accessible Spaces**	**Minimum Number of Van-Accessible Spaces**	**Minimum Number of Car-Accessible Spaces**
1-25	1	1	0
26-50	2	1	1
51-75	3	1	2
76-100	4	1	3
101-150	5	1	4
151-200	6	1	5
201-300	7	1	6
301-400	8	1	7
401-500	9	2	7
501-1,000	2% of total spaces	1 out of every 8 accessible spaces	7 out of every 8 accessible spaces
Over 1,000	20 + 1 per each 100 spaces over 1,000		

(c) Minimum Dimensions

All parking spaces reserved for persons with physical challenges shall comply with the parking space dimension standards of this section, provided that access aisles shall be provided immediately abutting such spaces, as follows:

(i) Car-accessible spaces shall have at least a 5-foot wide access aisle located abutting the designated parking space.

(ii) Van-accessible spaces shall have at least an 8-foot wide access aisle located abutting the designated parking space.

(d) Location of Spaces

Required spaces for persons with physical challenges shall be located in close proximity to building entrances and shall be designed to permit occupants of vehicles to reach the building entrance on an unobstructed path.

(e) Signs and Marking

Required spaces for persons with physical challenges shall be identified with signs and pavement markings identifying them as reserved for persons with physical challenges. Signs shall be posted directly in front of the parking space at a height of no less than 42 inches and no more than 72 inches above pavement level.

(10) Parking and Loading Space Specifications

(a) All loading areas and all off-street parking areas for 4 or more vehicles shall be developed in accordance with the standards of this Section, except for one and two family dwellings, agricultural and rural uses and storage of vehicular merchandise not counting toward the minimum requirements of this Ordinance.

(b) Required off-street parking spaces shall be so designed, arranged and regulated as to have individual spaces marked, be unobstructed and have access to an aisle or driveway so that any automobile may be moved without moving another, and so that no maneuvering directly incidental to entering or leaving a parking space shall be on any public right-of-way or walkway.

(c) Off-street parking spaces may be open to the sky or enclosed in a building. In any instance when a building is constructed or used by parking facilities on the zone lot, such building shall be treated as any major structure and subject to all requirements thereof.

(d) No repair work, sales or service of any kind shall be permitted in association with accessory off-street parking facilities unless such facilities are enclosed in a building and otherwise permitted in the zone district.

(e) All open off-street parking and loading areas, including driveways and other circulation areas, which shall be determined by the LaGrange County Advisory Plan Commission to attract an average of at least twenty-five (25) trips per day through the property's access point to the roadway, shall be surfaced with an all-weather paving material capable of carrying a wheel load of 4,000 pounds. All open off-street parking and loading areas, including driveways and other circulation areas, which shall be determined by the LaGrange County Advisory Plan Commission to attract an average of less than twenty-five (25) trips per day through the property's access point to the roadway, shall be improved with a durable dust-free gravel surface which shall be maintained in good condition, free of potholes, weeds, dirt, trash, and debris. Care should be taken in the design of off-street parking areas to alleviate possible tracking of gravel or debris onto the roadway. Parking spaces associated with one- or two- family dwelling are exempt from the paving requirements but shall be maintained with a dust free surface.

(f) Driveway entrances or exits shall be no closer than 25 feet to an adjoining residential property line or 10 feet to an adjoining nonresidential property line or designed in such a manner as to least interfere with traffic movement. No driveway across public property at the right-of-way line shall exceed a width of 30 feet; provided, that two driveways not exceeding 30 feet in width each may constitute a single entrance-exit divider designed driveway; provided further, that such driveways shall conform to the requirements of engineering departments having jurisdiction thereof.

(g) Any lighting facilities used to illuminate off-street parking areas shall be so located, shielded and directed upon the parking area in such a manner that they do not reflect or cause glare onto adjacent properties or interfere with street traffic. In no instance shall bare unshaded bulbs be used for such illumination. Lighting shall comply with Article 5, Section A.

(h) Parking areas shall be graded and properly drained in such a manner that there will be no free flow of water onto either adjacent property or public sidewalks.

(i) Parking areas shall be so lined or designated as to insure the most efficient use of the parking spaces and shall be provided with bumper guards or wheel guards so located that no part of the parked vehicle will extend beyond the boundary of the established parking area into any minimum required yard or onto any adjoining property

(C) Landscaping

(1) Purpose

Landscaping and screening devices are required for the following purposes:

(a) To reduce dust, glare and erosion;

(b) To provide shade;

(c) To assist in screening objectionable light, views and noises;

(d) To visually soften buildings and parking areas;

(e) To aid and improve air quality; and

(f) To provide privacy.

(2) Applicability

This section shall apply to all buildings and uses of land except single-family residences, two-family residences, agricultural uses, and development in B-4 Zoning Districts. Existing properties must be brought into compliance with the landscaping requirements when there is a change in the distinguishing traits or primary features of the use of a building or land as evidenced by increased parking, change in occupancy designation, change in outside storage, or other similar features after the effective date of this Ordinance. Use of a building or land shall refer to the primary or specific purpose for which the building or land is occupied, designed, intended or maintained. The staff shall not issue a Zoning Compliance Certificate unless the application includes a landscape plan meeting the requirements of this section. The staff shall not issue an occupancy permit for any use unless the landscaping has been installed in accordance with this ordinance. For uses to be occupied at times when the weather does not permit the installation of landscaping, the staff shall specify an appropriate deadline for completion of the landscaping. Failure to install the landscaping by the deadline shall constitute a violation of this ordinance.

(3) Standards for Landscape Materials

(a) Trees shall be at least 3 feet in height at the time of planting.

(b) Shrubs shall be at least 2-gallon size at the time of planting.

(4) General Requirements

On parcels where landscaping is required, at least 10% of the total land area shall be covered by landscaping. A minimum of 80% of the landscaped area shall consist of living trees and shrubs. The remainder

may be mulch, stone, or other decorative material. In addition, the following requirements shall apply:

(a) Refuse Containers; Outdoor Storage.

All refuse containers and all areas of permitted outdoor storage shall be enclosed by a screening fence, wall or densely planted evergreen hedge of a height sufficient to screen such containers or storage areas from view from adjoining residentially zoned properties and public or private streets. No refuse containers or storage areas shall be located between any principal structure and either its front or corner side lot line.

(b) Parking Areas

All parking areas containing spaces for 20 or more vehicles shall be provided with landscaping covering at least 5% of the area of the parking lot.

(c) Transitional Buffers

Wherever a business, industrial, or multifamily use is located adjacent to a single-family or two-family use, the setback area provided with landscaping shall include plantings or a fence that will form an opaque screen at least 6 feet in height.

(d) Maintenance

All landscaping shall be properly maintained. Dead plant materials shall be replaced in a timely manner, and landscaped areas shall be kept free of weeds and debris. Failure to maintain landscaping properly shall constitute a violation of this Ordinance.

(D) Signs

(1) Purpose and Applicability

This ordinance regulates all signs in LaGrange County that are visible from the public highway right-of-way, public facilities, trails open to the public, and navigable waterways. LaGrange County has a tradition and reputation as a community with a rich mix of land uses that blend into a landscape of high aesthetic quality. Depending on their size, numbers and character, signs may attract or repel visitors, affect the visual quality enjoyed daily by residents, affect the safety of vehicular traffic, and define the character of the area. Thus aesthetic considerations impact economic values as well as public health, safety and welfare. Therefore this Ordinance sets standards for the following purposes:

(a) Maintain and enhance the visual quality (aesthetics) of the community.

(b) Improve pedestrian and motorist safety by minimizing distractions and obstacles to clear views of the road and of directional or warning signs.

(c) Protect and enhance economic viability by assuring that LaGrange County will be a visually pleasant place to visit or live.

(d) Protect property values and private/public investments in property.

(e) Protect views of the natural landscape and sky.

(f) Avoid personal injury and property damage from structurally unsafe signs.

(g) Provide businesses with effective and efficient opportunities for identification by reducing competing demands for visual attention.

(h) Allow for expression by signage subject to reasonable regulation.

(2) Signs Authorized Without a Sign Permit

Subject to other applicable requirements and permits, the following Signs are authorized without a Sign Permit:

(a) Temporary Signs. Temporary signs shall be permitted provided they are not located in the public right-of-way. Temporary signs must be setback a minimum of ten (10) feet from any lot line and in accordance with Table 5(d)(1)

Table 5(d)(1)

Type of Sign	Maximum Size	Maximum Height	Maximum Number	Permitted Duration
Special Event Signs/Auction Signs	75 Sq. Ft.	15 Ft.	No maximum sign limit	Shall be installed up to 30 days prior to events and removed within 7 days following the special event
Construction Signs	75 Sq. Ft.	15 Ft.	No maximum sign limit	Shall not be permitted on site until an improvement location permit has been issued for the construction of the primary use or addition. Must be removed from premises within 30 days after issuance of the occupancy permit or temporary occupancy permit.

Real Estate Signs	16 Sq. Ft.	5 Ft.	No maximum sign limit	Removed within 15 days of sale closing, or the lease or rental of the premises

(b) Small Sign: A non-illuminated sign not exceeding nine (9) square feet in area and located no higher than sixty (60) inches from the ground. Examples of Small Signs include traffic pedestrian control and warning signs, including but not limited to “No Trespass” or “beware of Dog” signs.

(c) Governmental Signs: Governmental Signs do not require a permit.

(d) Flags. Governmental flags do not need a permit. Flags of any country, state, unit of local government, institution of higher learning, or similar institutional flags do not require a permit. Flags containing commercial messages or logos are considered to be signs and count toward the total number and area of signs allowed on the premises under the terms of this Ordinance. The Department, in its discretion, may require large or numerous governmental flags to be subject to the Ordinance.

(e) Warning Signs: Signs exclusively devoted to warning the public of dangerous conditions and unusual hazards such as drop offs, high voltage, fire danger, and explosives, are permitted. Warning Signs may not exceed three (3) square feet, unless otherwise provided by state or federal law.

(f) Historical, Cultural and Natural Site Signs: A Sign erected by a government agency, which exclusively denotes a recognized historical, cultural or natural site is permitted.

(g) Banners: Banners that do not exceed a total of seventy-five (75) square feet in area are permitted, only as on-premises signs, so long as the banner is kept in good repair.

(h) Message Board Signs: Message Board Signs are permitted so long as they meet the following criteria:

(i) The total Message Board Signage area shall not exceed eight (8) square feet per street frontage and is placed as to allow for the adequate passing of pedestrians;

ii. The Message Board Sign(s) shall be located in front of the business it represents during hours of operation only and is taken inside during non-business hours;

iii. The Message Board Sign is removed during high wind conditions in order to prevent a safety hazard.

(3) Signs Authorized With a Permit

The Department shall issue a Permit for Signs in accordance with the following provisions:

(a) **Business/Industrial District Wall and Ground Signs**: Wall Signs and Ground Signs are permitted on each Business/Industrial District Parcel. The total square footage of all signs on a Business/Industrial District parcel shall not exceed 150 square feet ("Total Area"), and such Total Area shall include signs authorized without a permit. The Total Area of the Wall Signs shall not exceed twenty percent (20%) of the area of the front face of the building on a Parcel, or seventy-five (75) square feet total, whichever is less. A Ground Sign may not exceed seventy-five (75) square feet and a height of fifteen (15) feet above the uniform finished grade. Unless more restrictive zoning applies, setbacks of Ground Signs from property lines shall be at least equal to the height of the Sign. Signs may be placed inside the window areas of buildings in business or industrial zones.

(b) **Agricultural District Wall and Ground Signs**: Wall Signs and Ground Signs are permitted on each Agricultural District Parcel. The total square footage of all signs on an Agricultural District Parcel shall not exceed 150 square feet ("Total Area"), and such Total Area shall include signs authorized without a permit. Unless more restrictive zoning applies, Ground Sign setbacks shall be at least equal to the height of the sign. Temporary Signs relating to seasonal agricultural activities, "pick your own berries" or produce sales, may not be used for more than six months in any calendar year. The total area of the Wall Signs shall not exceed twenty percent (20%) of the area of the front face of the building on a Parcel, or seventy-five (75) square feet total, whichever is less. Ground Signs may not exceed a height of fifteen (15) feet above uniform finished grade.

(c) **Residential/Lake/Urban District Signs**: Wall Signs are permitted on each residential, lake or urban district Parcel. Ground Signs are permitted on each residential, lake or urban district Parcel. The combination of the Wall signs and the Ground Sign may not exceed a total square footage of four (4) square feet per parcel. The height of the Ground Sign may not exceed five (5) feet above the uniform finished grade.

(d) Residential Neighborhood Identification Signs:

i. A Residential Neighborhood (Single-Family Subdivision, Multiple Family Housing Development, etc.) is permitted to have one Residential Neighborhood Identification Sign for each entrance street. Such Signs shall not extend into any public right-of-way. The face of the Sign shall not exceed thirty-two (32) square feet. The area of the

structural supporting elements shall not exceed fifty percent (50%) of the area of the message portion of the sign. The height of the Sign may not exceed five (5) feet above the uniform finished grade.

ii. Non-Dwelling Use Signs. A Non-Dwelling Use in a residential area, such as a school, a religious facility, an institutional use, a clubhouse, etc. is permitted to have one Ground Sign and one Wall Sign, neither of which shall exceed twelve (12) square feet in area. The area of the structural elements supporting a Ground Sign shall not exceed fifty percent (50%) of the area of the message portion of the Sign. The height of a Ground Sign may not exceed five (5) feet above uniform finished grade.

(4) Computations

(a) The area of a sign face, which is also the sign area of a wall sign or other sign with only one face, shall be computed by means of the smallest square, circle, rectangle, triangle or combination thereof that shall encompass the extreme limits of the writing, representation, emblem or other display, together with any representation, emblem, or other display, together with any material or color that is an integral part of the background of the display or used to differentiate the sign from backdrop or structure against which it is placed. This does not include any supporting framework, bracing or decorative fence or wall when such fence or wall otherwise meets zoning resolution regulations and is clearly incidental to the display itself. See Figure 5-D-1.

(b) The sign area for a sign with more than one face shall be computed by adding together the area of all sign faces visible from any one point.

(c) When two identical sign faces are placed back to back, so that both faces cannot be viewed from any one point at the same time, and when such sign faces are part of the same sign structure and are not more than twenty-four (24) inches apart, the sign are shall be computed by the measurement of one of the faces.

Figure 5-D-1

EXAMPLES OF MEASURING SIGN AREA

(d) Sign Height

The height of a sign shall be measured in a vertical plane from grade at the edge of pavement, of the street closest to the sign, to the highest point of the sign. (See Figure 5-D-2)

Figure 5-D-2

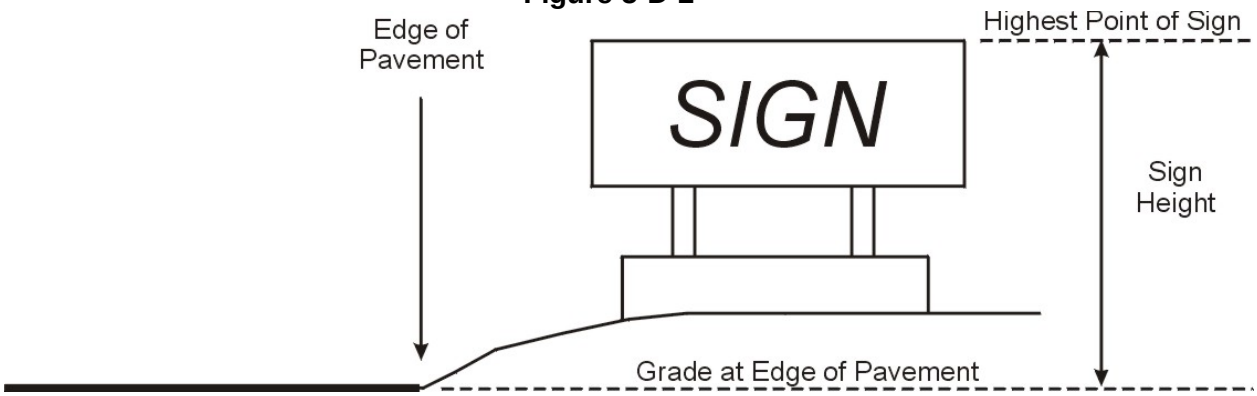

(5) Sign Permit Requirements

(a) Enforcement. The Department shall administer and enforce this Ordinance.

(b) Permit. A Permit is not required for "Signs Authorized Without A Permit." A Permit must be obtained from the Department for all other new signs. Except as provided in Paragraph 9 (b,c) herein, the alteration of sign faces, repainting or repair of a sign at the same location shall not be considered as construction of a new sign and shall not require a sign permit, provided there is no increase in the size of the sign. However, it is also the intent of this Ordinance that all non-conforming signs shall be brought into compliance with this Ordinance.

(c) Application. Applications for Sign Permits shall be made upon a form provided by the Department for this purpose. The Application shall contain the following information:

i. Name, address, phone, and if available, fax and e-mail of the Person applying for the Permit.
ii. Name, address, phone and if available, fax and e-mail of the Person owning the Parcel upon which the Sign is proposed to be placed.
iii. Location of the building, structure, and Parcel on which the Sign is or will be attached or erected.
iv. Position of the Sign in relation to nearby buildings, structures, property lines, existing or proposed rights-of-way, ordinary high-water marks or waterways, and the setback of applicable zoning Ordinances.
v. Two (2) copies of the plans and specifications. The method of construction and/or attachment to a building or in the ground shall be explained in the plans and specifications.
vi. Copy of stress sheets and calculations, if deemed necessary by the Department, showing the structure as designed for dead load and wind pressure
vii. Name, address, phone, and if available, fax and e-mail of the Person who has or will be erecting the sign.

(d) Such other information as the Department may require to show compliance with this Ordinance, and any other applicable laws.

(e) The seal or certificate of a registered structural or civil engineer, when required by the Department.

(f) The zoning district in which the Sign is to be placed.

(g) A statement that: “Any change in the information in this application, such as change of address, shall be submitted to the Department within seven (7) days after the change”

(h) Applications fully complying with all applicable standards shall be approved.

(i) Decisions on applications shall be made within 15 days after a fully complete application is available to the Department.

(j) Permit Fees. Permit Fees for Signs shall be established by the governing body of the Department. The Permit Fees must relate to the cost of issuing the permit and may vary based on the size, type and height of the Sign.

(k) False Information. A Person providing false information under this Ordinance shall not be eligible to apply for a Permit under this Ordinance for six (6) months from the date the Department determines false information was presented.

(6) Prohibited Signs

The following limitations, obligations, and prohibitions apply to all Signs:

(a) Absence of Permit. Any Sign, for which a Permit has not been issued and which is not a "Sign Authorized Without A Permit", is prohibited.

(b) Prohibited by Federal or State Law. Any sign, which is prohibited by Federal or State Law. All signs shall comply with all applicable requirements and conditions of this Ordinance and all other applicable local, county, State and Federal regulations.

(c) Roof Signs. Roof Signs that project from the roof of a building are prohibited.

(d) Public Property. No portion of privately-owned permanent Sign, or its supporting structures, such as poles or cables, shall be placed on, publicly owned property, a public right-of-way (such as a street, sidewalk, pole, hydrant, bridge, waterway, tree or other surface located on public property), or a proposed public right-of-way.

(e) Signs that are of a size, location, movement, content, coloring or manner of illumination which may be confused with or construed as traffic control device or which hide from view any traffic or street sign or signal.

(f) Signs that contain strings of light bulbs not permanently mounted on a rigid background.

(g) Revolving signs. A Revolving Sign is prohibited.

(h) Traffic Interference. A Sign (other than a traffic sign installed by a governmental entity) shall not simulate or imitate the size, lettering, or design of any traffic sign in such manner as to interfere, mislead, or confuse the public.

(i) Parked Vehicle. Any sign on a motor vehicle, trailer, farm implement, or other mobile equipment, which is parked in a position which is visible to traffic on a public road, waterway, or parking area for a period longer than six days in a sixty (60) day period for the primary purpose of advertising or conveying announcement, is prohibited.

(j) Visual Obstruction. Signs shall not be placed so as to obstruct the visibility of pedestrians and motorists at intersections and driveways.

(k) Signs which obstruct free access or egress from any building, including those that obstruct any fire escape, required exitway window, or door opening or that prevent free access to the roof by firefighters.

(l) Signs generating noise, smoke, vapor or odors.

(m) Inflatable signs, not including residential lawn ornaments.

(7) Construction Requirements

(a) Material. Signs must be constructed of wind and weather resistant material. All Signs shall have a neat, professional appearance.

(b) Codes. All Signs shall conform to the latest edition of the applicable building and electrical code requirements.

(c) Fastenings. All signs must remain safe and secure during the period of use. All parts of the Signs, including bolts and cables, shall remain painted, and free of corrosion.

(d) Fire Escapes. A Sign may not obstruct a fire escape.

(e) Lighting. External lighting shall be shielded from view and shall be focused upon the Sign to avoid stray lighting. Flashing, rotating, and intermittent external lighting are prohibited.

(f) Identification. All Signs for which a Permit is required shall identify the name and operating telephone number of the Person responsible for the Sign.

(g) Proximity to Electrical Conductors. Signs and all supporting structures shall be no closer to electrical utilities than is permitted by applicable codes. No Sign, including cables and supports, shall, in any event, be within six (6) feet of any electrical conductor, electrical light pole, electric street lamp, traffic light, or other public utility pole.

(h) Sanitation. Property surrounding any Ground Sign shall be maintained in a clean and sanitary condition. It shall be free from weeds, rubbish and flammable material.

(i) Landscaping. The area beneath and around a Sign shall be landscaped with plants, ground cover and/or materials so as to compliment the site and integrate the Sign with buildings, parking areas, surrounding vegetation and natural features of the landscape. The Owner of the Parcel on which a Sign is placed and the Person maintaining the Sign shall be required to keep the area in the vicinity of the Sign mowed and maintained in a safe, clean and sanitary condition, free of noxious or offensive substances and rubbish.

(j) Responsibility for Compliance. The Owner of the Parcel on which a Sign is placed and the Person maintaining the Sign are each fully responsible for the condition and the maintenance of the Sign, and the area around the Sign.

(k) Sign Maintenance. All signs shall be maintained in a good state of repair, including, but not limited to, repair of defective parts, painting and cleaning. All braces, bolts, clips, fastenings, and supporting frames must be securely affixed to the support structure or wall. Signs shall be kept free of rust, rot, insect infestation, bird nests and other deterioration.

(8) Non-Conforming Signs

(a) Intent. This Ordinance is intended to encourage the eventual elimination of Signs which do not comply with the Ordinance. The elimination of non-conforming Signs is important to the purpose stated in Section 1. However, it is also the intent of this Ordinance to avoid unreasonable invasion of property rights while accomplishing removal of non-conforming Signs.

(b) Continuance. A non-conforming Sign may be continued if it is maintained in good condition. It shall not, however, be replaced by another non-conforming Sign

(c) Nuisance. Any sign constituting an immediate hazard to health or safety, including signs placed in public right-of-ways, attached to utility poles or affixed to trees, shall be deemed a public nuisance and may be immediately removed by the department. An Unsafe Sign or Abandoned Sign shall be deemed a public nuisance, which shall be abated by the Owner within thirty (30) days of receiving notice from the Department. After sixty (60) days the Sign may be removed by the Department.

(9) Sign Development Plans

(a) In any zone district there may be area with special or unusual development problems or needs for compatibility, an owner of property may request that the Commission approve a sign development plan for a particular use, property, or area.

(b) The Plan Commission shall approve Sign Development Plans, even if they deviate from the requirements of this Ordinance, if the plans comply with the following developmental standards:

i. The number, sizes, materials and designs or the signs are properly related to the type and location of the use, the land area of the site, and the sizes, styles and locations of the buildings and other structures on the site.

ii. The number, sizes, materials and designs of the signs effectively communicate the uses to the motorist and/or pedestrian.

iii. The signs are consistent with the purposes of this Ordinance, are appropriate to the development or the architectural character of the building in which the use is located, and are compatible with existing adjacent uses.

iv. The signs are consistent with the intent and purposes of this Ordinance.

(c) A development plan for signs shall contain a visual representation of and/or criteria for design, area, height, placement, and location of the signs proposed for display.

(d) A use for which the Plan Commission has approved a Sign Development Plan may display only signs that comply with the approved plan.

(e) The staff may approve minor modifications to the approved sign development plans in the manner provided in Article 7, Section (A) (5) (b). Minor modifications include only changes that do not:

i. Increase the area of the signs by more than 5%

ii. Alter the relationship of the signs to neighboring property;

iii. Change the locations of the signs in such a manner s to increase nonconformity with setback requirements, interfere with pedestrian or vehicular traffic, interrupt architectural details, or otherwise significantly deviate from the plan approved by the Commission.

(10) First Amendment Protection

Any Sign allowed under this Ordinance may contain, in lieu of any other text, any otherwise lawful non-commercial message that does not direct attention to a business operated for profit or to a commodity or service for sale and that complies with all other provisions of this Ordinance including the specific provisions for signage in the land use category on which the sign is placed. The owner of any sign which is otherwise allowed by this Ordinance any substitute noncommercial copy in lieu of any other copy without additional approval or permitting. The purpose of this provision is to prevent any inadvertent favoring of commercial speech over noncommercial speech, or favoring of any noncommercial message over any other noncommercial message. This provision prevails over any more specific provision to the contrary.

(11) Administration

(a) Administration. The Department shall appoint personnel to administer and enforce the terms and conditions of this Ordinance and all other provisions relating to signs.

(b) Enforcement. The Department shall issue Permits as required by this Ordinance. The Department shall also ensure Signs comply

with this Ordinance and any other applicable law. The Department shall also enforce the requirement that all Signs properly comply with this Ordinance by procuring a Permit. The Department shall make such inspections as may be necessary and shall initiate appropriate action to enforce compliance with this Ordinance and other applicable laws.

(c) Department Powers. The Department shall have the power and authority to administer and enforce this Ordinance. Included among such powers are the following specific powers:

i. Every Sign for which a Permit is required shall be subject to the inspection and approval of the Department, including verification of the use of the Parcel, and thus the standards that apply to signage. When deemed advisable, a Sign maybe inspected at the point of manufacture.

ii. Upon presentation of proper identification to the Sign Owner of Owner's agent, the department may enter the Sign area for purposes of inspecting the Sign, Sign structure, and any fasteners securing the Sign to a building or support. In cases of emergency, where imminent hazards to persons or property are known to exist, and where the Sign Owner, or Owner's agent, is not readily available, the department may enter the Sign area for purposes of inspection or remediation. When on private Property, the Department shall observe rules and regulation concerning safety, internal security, and fire protection.

iii. Upon issuance of a Stop Work Order from the Department, work on any Sign that is being conducted in any manner contrary to this Ordinance shall be immediately stopped. This notice and order shall be in writing and shall be given to the Owner of the Parcel, the Sign Owner, or to the person performing the work. The Stop Work Order shall state the conditions under which work may be resumed. The LaGrange County Sheriff's Department or applicable law enforcement agency shall have authority to enforce a Stop Work Order issued pursuant to this Section.

iv. The department has the authority to deny or revoke any Permit authorized by this Ordinance if the Sign violates the Ordinance or another law, provided that the Department shall offer the Sign Owner an opportunity to be heard. Any sign Owner aggrieved by a decision of an authorized official under this Section shall be entitled to an administrative appeal pursuant to the provisions set forth in Article 7, Section E, of this Ordinance.

v. If the Department has determined that a violation has occurred, the owner shall have thirty (30) days to bring the Sign into compliance or remove the Sign. If, however, the Department believes the health, safety or welfare of the citizens is endangered by any violation of this Ordinance, the Department may immediately revoke any Sign Permit.

vi. A Sign installed after the effective date of this Ordinance, and not conforming to this Ordinance, shall be removed by the Owner. The Sign Owner shall not be entitled to compensation for the Sign removal and shall reimburse the Department for any cost incurred by the Department in connection with the removal.

vii. Any Person violating any provision of this Ordinance shall be issued a citation with a forfeiture of not less than $25.00 and not more than $500.00 for each day's violation. Each day, subsequent to the thirty (30) day period allowed for corrective action, shall constitute a separate violation. In addition, the Department, though its attorney, is authorized to adjudicate the offense with a summons and complaint and to take any other action available to the Department through the enforcement provisions of this Ordinance, including legal, injunctive and equitable, to assure compliance with this Ordinance.

(E) Planned Unit Developments

(1) Authority

In accordance with IC 36-7-4, the 1500 Series, LaGrange County is hereby authorized to approve or disapprove Planned Unit Development proposals.

(2) Criteria

(a) PUDs shall reflect creativity in design and sensitivity to the natural conditions of the site. At least 40% of the land area in a PUD shall be devoted to open space or recreation. These features include golf courses, lakes, streams or rivers, orchards nature preserves, or other similar amenities

(b) In making its recommendation to the County Commissioners on a Planned Unit Development proposal, the Plan Commission shall evaluate the consistency of the proposal with the Comprehensive Plan. The County Commissioners shall approve a PUD ordinance only after a finding that the proposal is consistent with the Comprehensive Plan.

(3) Standards

The Plan Commission or County Commissioners may modify any development standard of this Ordinance for a PUD, provided that the Plan Commission and/or County Commissioners find(s) that such modification promotes the purposes of this Ordinance and is consistent with the spirit and intent of this ordinance. The Commission and County Commissioners shall make specific findings to support each permitted deviation from the ordinance standards. It is the responsibility of the applicant to provide justification for modification of any development standard. PUD modifications are not subject to Board of Zoning Appeals review.

(F) Development Plans

(1) Authority

In accordance with IC 36-7-4, the 1400 Series, the Plan Commission is hereby authorized to approve or disapprove Development Plans for the uses in the zoning districts for which they are required under the terms of this Ordinance.

(2) Criteria

Development plans are intended to ensure that districts and uses with special needs for compatibility are developed in a responsible manner, consistent with the Comprehensive Plan and with the spirit and intent of this Ordinance. The Plan Commission shall approve a Development Plan only if the following criteria are met:

(a) The development is compatible with surrounding land uses.

(b) The development will have adequate sewage disposal, water supply, drainage, and other utilities.

(c) Traffic will be managed in a manner that creates conditions favorable to health, safety, convenience, and the harmonious development of the community as described below:

(d) The design and location of proposed street and highway access points minimize safety hazards and congestion.

(e) The capacity of adjacent streets and highways is sufficient to safely and efficiently accept traffic that will be generated by the new development.

(f) The entrances, streets, and internal traffic circulation facilities in the development plan are compatible with existing and planned streets and adjacent developments and are safe for pedestrian and vehicular traffic.

(g) The Commission may require designated bus parking for uses subject to tour bus traffic.

(G) Manufactured Housing

(1) Single-family Dwellings

For purposes of this Ordinance, any manufactured home meeting the criteria in Article 3, Section (C) (2) (a) shall be considered to be a single-family dwelling and shall be permitted in the same manner as any other single-family dwelling.

(2) Other Manufactured Homes

Any manufactured home that does not comply with the criteria in Article 3, Section (C) (2) (a) shall be permitted only in manufactured home parks or manufactured home subdivisions as specified in this section. Structures designed as manufactured homes shall not be used as commercial structures unless they are located within manufactured home parks or manufactured home subdivisions.

(3) Manufactured Home Subdivisions

Subdivisions exclusively for manufactured housing are permitted, provided that there is a notation on the recorded plat stating that the development is for manufactured housing. Such subdivisions shall meet all applicable standards of this Ordinance. In addition, the following development standard shall apply:

(a) The development shall contain at least 10 acres and 20 lots.

(b) The primary entrance to a dwelling shall be facing the street, unless otherwise required for handicap access.

(c) The roof pitch shall not be less than 3:12.

(d) Every dwelling unit shall be set on a permanent ground set foundation which shall include an exterior wall of stone, concrete, brick, or other masonry product, or any material complying with the Indiana Building Code.

(4) Manufactured Home Parks

(a) Permitted Uses

Table 5-G-1

PERMITTED USES MANUFACTURED HOME PARKS
Accessory building (garage, storage shed, etc.)
Clubhouse
Convenience Store
Laundry
Management Office
Manufactured home
Manufactured home sales, rental, storage
Mini-warehouse
Park or recreational facility
Private school
Public school
Religious facility

(b) Dimensional and Intensity Standards

Table 5-G-2

MANUFACTURED HOME PARKS DIMENSIONAL AND INTENSITY STANDARDS		
Type of Standard		**Requirement**
Park size		5 acres minimum
Density		8 units per acre maximum
Site size		3,500 sq. ft. minimum
Site width		40 ft. minimum
Unit separation distance		20 ft. minimum
Lot coverage		50% maximum
Setbacks	Front	20 ft. minimum
	Side	5 ft.
	Rear	10 ft.
Common open space		10% minimum
Perimeter setback		15 ft.

(c) Development Standards

(i) Manufactured Home Parks shall be in accordance with I.C. 16-41-27-1 et seq., Rule 410 IAC 6-6 and subsequent amendments, the State Board of Health Regulations, and the requirements of this Ordinance.

(ii) Uses other than dwellings shall be subordinate to the residential character of the park.

(iii) Uses shall be located, designed and intended to serve only the needs of persons living in the park.

(iv) Each manufactured home must be tied down and have perimeter skirting manufactured for that purpose

(v) Each manufactured home shall have a storage building that contains at least 100 square feet or a garage

(vi) No more than 20% of the area of any individual home site shall be devoted to accessory structures.

(vii) There shall be at least 2 parking spaces per dwelling unit adjacent to, or conveniently near, each manufactured home site, Guest parking spaces or overflow parking spaces shall be provided as regulated in Rule 410 IAC 6-6 and its subsequent amendments, shall be distributed evenly throughout the park.

(viii) The minimum street pavement width shall be 20 feet.

(ix) Manufactured home parks shall be served by an approved sanitary sewer system and shall have a water supply sufficient for fire suppression.

(5) Campgrounds and Recreational Vehicle Parks

(a) Permitted Uses

(i) Campsites for recreational vehicles, tents, cabins, lean-tos, or similar temporary abodes

(ii) Community activities building

(iii) Recreational areas and facilities, such as swimming pools, tennis courts, sports fields, hiking or walking trails, and picnic areas

(iv) Laundry facilities

(v) Restroom and shower facilities

(vi) Convenience store

(vii) Management office

(viii) Manager housing

(ix) Off-season storage of recreational vehicles

(x) Sales and rental of recreational vehicles

(b) Occupancy Standards

(i) Each recreational vehicle, other than those that are for sale, shall display a current, valid license plate.

(ii) Campsites shall be for seasonal, temporary occupancy only, limited to the time periods shown on the table below.

Table 5-G-3

OCCUPANCY LIMITS CAMPGROUNDS AND RV PARKS	
Type of Camping Unit	**Maximum Occupancy Time**
Recreational vehicle	6 months/calendar year
Cabin	6 months/calendar year
Tent or other temporary abode	60 days/calendar year

(c) Dimensional Requirements

Table 5-G-4

DIMENSIONAL REQUIREMENTS CAMPGROUNDS AND RV PARKS					
Use	**Minimum Area**	**Minimum Setback (feet)**			**Minimum Width (feet)**
		Front	**Side**	**Rear**	
Campground or RV Park	5 acres	75	25	25	100
RV or cabin campsite	1,500 square feet	6 foot minimum separation between RV's and/or cabins			35
Other campsite	800 square feet				25

(d) Development Standards

(i) All campgrounds and RV parks shall meet all state and local standards and shall have adequate sewage disposal, rubbish disposal, and water supply. The health and safety standards contained in Sec. 410 of the Indiana Administrative Code apply to all campgrounds in LaGrange County, regardless of size.

(ii) At least 10% of the gross land area in the park shall be maintained as usable open space or recreation areas

(iii) The park shall have perimeter landscaping in accordance with Article 5, Section C.

(H) Floodplain Regulations

(1) Statutory Authorization, Findings of Fact, Purpose, and Objectives

(a) Statutory Authorization

The Indiana Legislature has in IC 36-7-4 granted the power to local government units to control land use within their jurisdictions. Therefore, the Board of County Commissioners of LaGrange County does hereby adopt the following floodplain management regulations.

(b) Findings of Fact

(i) The flood hazard areas of LaGrange County are subject to periodic inundation which results in loss of life and property, health and safety hazards, disruption of commerce and governmental services, extraordinary public expenditures for flood protection and relief, and impairment of the tax base, all of which adversely affect the public health, safety, and general welfare.

(ii) These flood losses are caused by the cumulative effect of obstructions in floodplains causing increases in flood heights and velocities, and by the occupancy in flood hazard areas by uses vulnerable to floods or hazardous to other lands which are inadequately elevated, flood-proofed, or otherwise unprotected from flood damages.

(c) Statement of Purpose

It is the purpose of this ordinance to promote the public health, safety, and general welfare and to minimize public and private losses due to flood conditions in specific areas by provisions designed to:

(i) Restrict or prohibit uses which are dangerous to health, safety, and property due to water or erosion hazards, which result in damaging increases in erosion or in flood heights or velocities;

(ii) Require that uses vulnerable to floods, including facilities which serve such uses, be protected against flood damage at the time of initial construction;

(iii) Control the alteration of natural floodplains, stream channels, and natural protective barriers which are involved in the accommodation of flood waters;

(iv) Control filling, grading, dredging, and other development which may increase erosion or flood damage;

(v) Prevent or regulate the construction of flood barriers which will unnaturally divert floodwaters or which may increase flood hazards to other lands; and,

(vi) Make federally subsidized flood insurance available for structures and their contents in the County by fulfilling the requirements of the National Flood Insurance Program.

(d) Objectives

The objectives of this ordinance are:

(i) To protect human life and health;

(ii) To minimize expenditure of public money for costly flood control projects;

(iii) To minimize the need for rescue and relief efforts associated with flooding and generally undertaken at the expense of the general public;

(iv) To minimize prolonged business interruptions;

(v) To minimize damage to public facilities and utilities such as water and gas mains, electric, telephone, and sewer lines, streets, and bridges located in floodplains;

(vi) To help maintain a stable tax base by providing for the sound use and development of flood prone areas in such a manner as to minimize flood blight areas, and;

(vii) To ensure that potential homebuyers are notified that property is in a flood area.

(2) Definitions

(a) Unless specifically defined below, words or phrases used in this ordinance shall be interpreted so as to give them the meaning they have in common usage and to give this ordinance it's most reasonable application.

(b) A zone means portions of the SFHA in which the principal source of flooding is runoff from rainfall, snowmelt, or a combination of both. In A zones, floodwaters may move slowly or rapidly, but waves are usually not a significant threat to buildings. These areas are labeled as Zone A, Zone AE, Zones A1-A30, Zone AO, Zone AH, Zone AR and Zone A99 on a FIRM or FHBM. The definitions are presented below:

(i) **Zone A:** Areas subject to inundation by the one-percent annual chance flood event. Because detailed hydraulic analyses have not been performed, no base flood elevation

or depths are shown. Mandatory flood insurance purchase requirements apply.

(ii) **Zone AE and A1-A30:** Areas subject to inundation by the one-percent annual chance flood event determined by detailed methods. Base flood elevations are shown within these zones. Mandatory flood insurance purchase requirements apply. (Zone AE is on new and revised maps in place of Zones A1-A30.)

(iii) **Zone AO:** Areas subject to inundation by one-percent annual chance shallow flooding (usually sheet flow on sloping terrain) where average depths are between one and three feet. Average flood depths derived from detailed hydraulic analyses are shown within this zone. Mandatory flood insurance purchase requirements apply.

(iv) **Zone AH:** Areas subject to inundation by one-percent annual chance shallow flooding (usually areas of ponding) where average depths are 1-3 feet. Average flood depths derived from detailed hydraulic analyses are shown within this zone. Mandatory flood insurance purchase requirements apply.

(v) **Zone AR:** Areas that result from the decertification of a previously accredited flood protection system that is determined to be in the process of being restored to provide base flood protection. Mandatory flood insurance purchase requirements apply.

(vi) **Zone A99:** Areas subject to inundation by the one-percent annual chance flood event, but which will ultimately be protected upon completion of an under-construction Federal flood protection system. These are areas of special flood hazard where enough progress has been made on the construction of a protection system, such as dikes, dams, and levees, to consider it complete for insurance rating purposes. Zone A99 may only be used when the flood protection system has reached specified statutory progress toward completion. No base flood elevations or depths are shown. Mandatory flood insurance purchase requirements apply.

(vii) **Accessory structure (appurtenant structure)** means a structure that is located on the same parcel of property as the principal structure and the use of which is incidental to the use of the principal structure. Accessory structures should constitute a minimal initial investment, may not be used for human habitation, and be designed to have minimal flood damage potential. Examples of accessory

structures are detached garages, carports, storage sheds, pole barns, and hay sheds.

(viii) **Addition (to an existing structure)** means any walled and roofed expansion to the perimeter of a structure in which the addition is connected by a common load-bearing wall other than a firewall. Any walled and roofed addition, which is connected by a firewall or is separated by independent perimeter load-bearing walls, is new construction.

(ix) **Appeal** means a request for a review of the floodplain administrator's interpretation of any provision of this ordinance or a request for a variance.

(x) **Area of shallow flooding** means a designated AO or AH Zone on the community's Flood Insurance Rate Map (FIRM) with base flood depths from one to three feet where a clearly defined channel does not exist, where the path of flooding is unpredictable and indeterminate, and where velocity flow may be evident. Such flooding is characterized by ponding or sheet flow.

(xi) **Base Flood Elevation (BFE)** means the elevation of the one-percent annual chance flood.

(xii) **Basement** means that portion of a structure having its floor sub-grade (below ground level) on all sides.

(xiii) **Building** - see "Structure."

(xiv) **Community** means a political entity that has the authority to adopt and enforce floodplain ordinances for the area under its jurisdiction.

(xv) **Community Rating System (CRS)** means a program developed by the Federal Insurance Administration to provide incentives for those communities in the Regular Program that have gone beyond the minimum floodplain management requirements to develop extra measures to provide protection from flooding.

(xvi) **Critical facility** means a facility for which even a slight chance of flooding might be too great. Critical facilities include, but are not limited to, schools, nursing homes, hospitals, police, fire, and emergency response installations, installations which produce, use or store hazardous materials or hazardous waste.

(xvii) **Development** means any man-made change to improved or unimproved real estate including but not limited to:

A.) Construction, reconstruction, or placement of a structure or any addition to a structure;

B.) Installing a manufactured home on a site, preparing a site for a manufactured home or installing recreational vehicle on a site for more than 180 days;

C.) Installing utilities, erection of walls and fences, construction of roads, or similar projects;

D.) Construction of flood control structures such as levees, dikes, dams, channel improvements, etc.;

E.) Mining, dredging, filling, grading, excavation, or drilling operations;

F.) Construction and/or reconstruction of bridges or culverts;

G.) Storage of materials; or

H.) Any other activity that might change the direction, height, or velocity of flood or surface waters.

I.) "Development" does not include activities such as the maintenance of existing structures and facilities such as painting, re-roofing; resurfacing roads; or gardening, plowing, and similar agricultural practices that do not involve filling, grading, excavation, or the construction of permanent structures.

(xviii) **Elevated structure** means a non-basement structure built to have the lowest floor elevated above the ground level by means of fill, solid foundation perimeter walls, pilings, or columns (posts and piers).

(xix) **Elevation Certificate** is a certified statement that verifies a structure's elevation information.

(xx) **Emergency Program** means the first phase under which a community participates in the NFIP. It is intended to provide a first layer amount of insurance at subsidized rates on all insurable structures in that community before the effective date of the initial FIRM.

(xxi) **Encroachment** means the advance or infringement of uses, fill, excavation, buildings, permanent structures or development into a floodplain, which may impede or alter the flow capacity of a floodplain.

(xxii) **Existing Construction** means any structure for which the "start of construction" commenced before effective date of the community's first floodplain ordinance.

(xxiii) **Existing manufactured home park or subdivision** means a manufactured home park or subdivision for which the construction of facilities for servicing the lots on which the

manufactured homes are to be affixed (including, at a minimum, the installation of utilities, the construction of streets, and either final site grading or the pouring of concrete pads) is completed before the effective date of the community's first floodplain ordinance.

(xxiv) **Expansion to an existing manufactured home park or subdivision** means the preparation of additional sites by the construction of facilities for servicing the lots on which the manufactured homes are to be affixed (including the installation of utilities, the construction of streets, and either final site grading or the pouring of concrete pads).

(xxv) **FEMA** means the Federal Emergency Management Agency.

(xxvi) **Five-hundred year flood (500-year flood)** means the flood that has a 0.2 percent chance of being equaled or exceeded in any year.

(xxvii) **Flood** means a general and temporary condition of partial or complete inundation of normally dry land areas from the overflow, the unusual and rapid accumulation, or the runoff of surface waters from any source.

(xxviii) **Flood Boundary and Floodway Map (FBFM)** means an official map on which the Federal Emergency Management Agency (FEMA) or Federal Insurance Administration (FIA) has delineated the areas of flood hazards and regulatory floodway.

(xxix) **Flood Hazard Boundary Map (FHBM)** means an official map of a community, issued by FEMA, where the boundaries of the areas of special flood hazard have been identified as Zone A.

(xxx) **Flood Insurance Rate Map (FIRM)** means an official map of a community, on which FEMA has delineated both the areas of special flood hazard and the risk premium zones applicable to the community.

(xxxi) **Flood Insurance Study (FIS)** is the official hydraulic and hydrologic report provided by FEMA. The report contains flood profiles, as well as the FIRM, FBFM (where applicable), and the water surface elevation of the base flood.

(xxxii) **Flood Prone Area** means any land area acknowledged by a community as being susceptible to inundation by water from any source. (See "Flood")

(xxxiii) **Floodplain** means the channel proper and the areas adjoining any wetland, lake or watercourse which have

been or hereafter may be covered by the regulatory flood. The floodplain includes both the floodway and the fringe districts.

(xxxiv) **Floodplain management** means the operation of an overall program of corrective and preventive measures for reducing flood damage and preserving and enhancing, where possible, natural resources in the floodplain, including but not limited to emergency preparedness plans, flood control works, floodplain management regulations, and open space plans.

(xxxv) **Floodplain management regulations** means this ordinance and other zoning ordinances, subdivision regulations, building codes, health regulations, special purpose ordinances, and other applications of police power which control development in flood-prone areas. This term describes federal, state, or local regulations in any combination thereof, which provide standards for preventing and reducing flood loss and damage. Floodplain management regulations are also referred to as floodplain regulations, floodplain ordinance, flood damage prevention ordinance, and floodplain management requirements.

(xxxvi) **Flood Protection Grade (FPG)** is the elevation of the regulatory flood plus two feet at any given location in the SFHA. (see “Freeboard”)

(xxxvii) **Floodproofing (dry floodproofing)** is a method of protecting a structure that ensures that the structure, together with attendant utilities and sanitary facilities, is watertight to the floodproofed design elevation with walls that are substantially impermeable to the passage of water. All structural components of these walls are capable of resisting hydrostatic and hydrodynamic flood forces, including the effects of buoyancy, and anticipated debris impact forces.

(xxxviii) **Floodproofing certificate** is a form used to certify compliance for non-residential structures as an alternative to elevating structures to or above the FPG. This certification must be by a Registered Professional Engineer or Architect.

(xxxix) **Floodway** is the channel of a river or stream and those portions of the floodplains adjoining the channel which are reasonably required to efficiently carry and discharge the peak flood flow of the regulatory flood of any river or stream.

(xl) **Freeboard** means a factor of safety, usually expressed in feet above the BFE, which is applied for the purposes of floodplain management. It is used to compensate for the many unknown factors that could contribute to flood heights greater than those calculated for the base flood.

(xli) **Fringe** is those portions of the floodplain lying outside the floodway.

(xlii) **Functionally** dependent facility means a facility which cannot be used for its intended purpose unless it is located or carried out in close proximity to water, such as a docking or port facility necessary for the loading and unloading of cargo or passengers, shipbuilding, ship repair, or seafood processing facilities. The term does not include long-term storage, manufacture, sales, or service facilities.

(xliii) **Hardship (as related to variances of this ordinance)** means the exceptional hardship that would result from a failure to grant the requested variance. The Board of County Commissioners of LaGrange County requires that the variance is exceptional, unusual, and peculiar to the property involved. Mere economic or financial hardship alone is NOT exceptional. Inconvenience, aesthetic considerations, physical handicaps, personal preferences, or the disapproval of one's neighbors likewise cannot, as a rule, qualify as an exceptional hardship. All of these problems can be resolved through other means without granting a variance, even if the alternative is more expensive, or requires the property owner to build elsewhere or put the parcel to a different use than originally intended.

(xliv) **Highest adjacent grade** means the highest natural elevation of the ground surface, prior to the start of construction, next to the proposed walls of a structure.

(xlv) **Historic structure** means any structure individually listed on the Register of Historic Places or the Indiana State Survey of Historic Architectural, Archaeological and Cultural Sites, Structures, Districts, and Objects.

(xlvi) **Increased Cost of Compliance (ICC)** means the cost to repair a substantially damaged structure that exceeds the minimal repair cost and that is required to bring a substantially damaged structure into compliance with the local flood damage prevention ordinance. Acceptable mitigation measures are elevation, relocation, demolition, or any combination thereof. All renewal and new business

flood insurance policies with effective dates on or after June 1, 1997, will include ICC coverage.

(xlvii) **Letter of Map Amendment (LOMA)** means an amendment to the currently effective FEMA map that establishes that a property is not located in a SFHA. A LOMA is only issued by FEMA.

(xlviii) **Letter of Map Revision (LOMR)** means an official revision to the currently effective FEMA map. It is issued by FEMA and changes flood zones, delineations, and elevations.

(xlix) **Letter of Map Revision Based on Fill (LOMR-F)** means an official revision by letter to an effective NFIP map. A LOMR-F provides FEMA's determination concerning whether a structure or parcel has been elevated on fill above the BFE and excluded from the SFHA.

(l) **Lowest adjacent grade** means the lowest elevation, after completion of construction, of the ground, sidewalk, patio, deck support, or basement entryway immediately next to the structure.

(li) **Lowest floor** means the lowest of the following:

A.) The top of the lowest level of the structure;

B.) The top of the basement floor;

C.) The top of the garage floor, if the garage is the lowest level of the structure;

D.) The top of the first floor of a structure elevated on pilings or pillars;

E.) The top of the floor level of any enclosure, other than a basement, below an elevated structure where the walls of the enclosure provide any resistance to the flow of flood waters unless:

1.) The walls are designed to automatically equalize the hydrostatic flood forces on the walls by allowing for the entry and exit of flood waters by providing a minimum of two openings (in addition to doorways and windows) in a minimum of two exterior walls having a total net area of one (1) square inch for every one square foot of enclosed area. The bottom of all such openings shall be no higher than one (1) foot above the exterior grade or the interior grade immediately beneath each opening, whichever is higher; and,

2.) Such enclosed space shall be usable solely for the parking of vehicles and building access.

(lii) **Manufactured home** means a structure, transportable in one or more sections, which is built on a permanent chassis and is designed for use with or without a permanent foundation when attached to the required utilities. The term "manufactured home" does not include a "recreational vehicle."

(liii) **Manufactured home park or subdivision** means a parcel (or contiguous parcels) of land divided into two or more manufactured home lots for rent or sale.

(liv) **Map amendment** means a change to an effective NFIP map that results in the exclusion from the SFHA of an individual structure or a legally described parcel of land that has been inadvertently included in the SFHA (i.e., no alterations of topography have occurred since the date of the first NFIP map that showed the structure or parcel to be within the SFHA).

(lv) **Map panel number** is the four-digit number followed by a letter suffix assigned by FEMA on a flood map. The first four digits represent the map panel, and the letter suffix represents the number of times the map panel has been revised. (The letter “A” is not used by FEMA, the letter “B” is the first revision.)

(lvi) **Market value** means the building value, excluding the land (as agreed to between a willing buyer and seller), as established by what the local real estate market will bear. Market value can be established by independent certified appraisal, replacement cost depreciated by age of building (actual cash value), or adjusted assessed values.

(lvii) **Mitigation** means sustained actions taken to reduce or eliminate long-term risk to people and property from hazards and their effects. The purpose of mitigation is twofold: to protect people and structures, and to minimize the cost of disaster response and recovery.

(lviii) **National Flood Insurance Program (NFIP)** is the federal program that makes flood insurance available to owners of property in participating communities nationwide through the cooperative efforts of the Federal Government and the private insurance industry.

(lix) **National Geodetic Vertical Datum (NGVD) of 1929** as corrected in 1929 is a vertical control used as a reference for establishing varying elevations within the floodplain.

(lx) **New construction** means any structure for which the "start of construction" commenced after the effective date of the community's first floodplain ordinance.

(lxi) **New manufactured home park or subdivision** means a manufactured home park or subdivision for which the construction of facilities for servicing the lots on which the manufactured homes are to be affixed (including at a minimum, the installation of utilities, the construction of streets, and either final site grading or the pouring of concrete pads) is completed on or after the effective date of the community's first floodplain ordinance.

(lxii) **North American Vertical Datum of 1988 (NAVD 88)** as adopted in 1993 is a vertical control datum used as a reference for establishing varying elevation within the floodplain.

(lxiii) **Obstruction** includes, but is not limited to, any dam, wall, wharf, embankment, levee, dike, pile, abutment, protection, excavation, canalization, bridge, conduit, culvert, building, wire, fence, rock, gravel, refuse, fill, structure, vegetation, or other material in, along, across or projecting into any watercourse which may alter, impede, retard or change the direction and/or velocity of the flow of water; or due to its location, its propensity to snare or collect debris carried by the flow of water, or its likelihood of being carried downstream.

(lxiv) **One-hundred year flood (100-year flood)** is the flood that has a one percent (1%) chance of being equaled or exceeded in any given year. Any flood zone that begins with the letter A is subject to the one-percent annual chance flood. See "Regulatory Flood".

(lxv) **One-percent annual chance flood** is the flood that has a one percent (1%) chance of being equaled or exceeded in any given year. Any flood zone that begins with the letter A is subject to the one-percent annual chance flood. See "Regulatory Flood".

(lxvi) **Participating community** is any community that voluntarily elects to participate in the NFIP by adopting and enforcing floodplain management regulations that are consistent with the standards of the NFIP.

(lxvii) **Physical Map Revision (PMR)** is an official republication of a community's FEMA map to effect changes to base (1-percent annual chance) flood elevations, floodplain boundary delineations, regulatory floodways, and

planimetric features. These changes typically occur as a result of structural works or improvements, annexations resulting in additional flood hazard areas, or correction to base flood elevations or SFHAs.

(lxviii) **Post-FIRM construction** means construction or substantial improvement that started on or after the effective date of the initial FIRM of the community or after December 31, 1974, whichever is later.

(lxix) **Pre-FIRM construction** means construction or substantial improvement, which started on or before December 31, 1974, or before the effective date of the initial FIRM of the community, whichever is later.

(lxx) **Probation** is a means of formally notifying participating communities of violations and deficiencies in the administration and enforcement of the local floodplain management regulations.

(lxxi) **Public safety and nuisance**, anything which is injurious to the safety or health of an entire community, neighborhood or any considerable number of persons, or unlawfully obstructs the free passage or use, in the customary manner, of any navigable lake, or river, bay, stream, canal, or basin.

(lxxii) **Recreational vehicle** means a vehicle which is (1) built on a single chassis; (2) 400 square feet or less when measured at the largest horizontal projections; (3) designed to be self-propelled or permanently towable by a light duty truck; and (4) designed primarily not for use as a permanent dwelling, but as quarters for recreational camping, travel, or seasonal use.

(lxxiii) **Regular program** means the phase of the community's participation in the NFIP where more comprehensive floodplain management requirements are imposed and higher amounts of insurance are available based upon risk zones and elevations determined in a FIS.

(lxxiv) **Regulatory flood** means the flood having a one percent (1%) chance of being equaled or exceeded in any given year, as calculated by a method and procedure that is acceptable to and approved by the Indiana Department of Natural Resources and the Federal Emergency Management Agency. The regulatory flood elevation at any location is as defined in Article 5, Section (H)(2)(b) of this ordinance. The "Regulatory Flood" is also known by the

term "Base Flood", “One-Percent Annual Chance Flood”, and “100-Year Flood”.

(lxxv) **Repetitive loss** means flood-related damages sustained by a structure on two separate occasions during a 10-year period ending on the date of the event for which the second claim is made, in which the cost of repairing the flood damage, on the average, equaled or exceeded 25% of the market value of the structure at the time of each such flood event.

(lxxvi) **Section 1316** is that section of the National Flood Insurance Act of 1968, as amended, which states that no new flood insurance coverage shall be provided for any property that the Administrator finds has been declared by a duly constituted state or local zoning authority or other authorized public body to be in violation of state or local laws, regulations, or ordinances that intended to discourage or otherwise restrict land development or occupancy in flood-prone areas.

(lxxvii) **Special Flood Hazard Area (SFHA)** means those lands within the jurisdictions of LaGrange County subject to inundation by the regulatory flood. The SFHAs of the LaGrange County are generally identified as such on the LaGrange County, Indiana and Incorporated Areas Flood Insurance Rate Map prepared by the Federal Emergency Management Agency, dated November 20, 2013 as well as any future updates, amendments, or revisions, prepared by the Federal Emergency Management Agency with the most recent date. (These areas are shown on a FHBM or FIRM as Zone A, AE, A1- A30, AH, AR, A99, or AO).

(lxxviii) **Start of construction** includes substantial improvement, and means the date the building permit was issued, provided the actual start of construction, repair, reconstruction, or improvement was within 180 days of the permit date. The actual start means the first placement or permanent construction of a structure (including a manufactured home) on a site, such as the pouring of slabs or footing, installation of piles, construction of columns, or any work beyond the stage of excavation for placement of a manufactured home on a foundation. Permanent construction does not include land preparation, such as clearing, grading and filling; nor does it include the installation of streets and/or walkways; nor does it include excavation for a basement, footings, piers, foundations, or the erection of temporary forms; nor does it include the installation on the property of accessory buildings, such as

garages or sheds not occupied as dwelling units or not part of the main structure. For substantial improvement, the actual start of construction means the first alteration of any wall, ceiling, floor, or other structural part of a building, whether or not that alteration affects the external dimensions of the building.

(lxxix) **Structure** means a structure that is principally above ground and is enclosed by walls and a roof. The term includes a gas or liquid storage tank, a manufactured home, or a prefabricated building. The term also includes recreational vehicles to be installed on a site for more than 180 days.

(lxxx) **Substantial damage** means damage of any origin sustained by a structure whereby the cost of restoring the structure to it's before damaged condition would equal or exceed 50 percent of the market value of the structure before the damage occurred.

(lxxxi) **Substantial improvement** means any reconstruction, rehabilitation, addition, or other improvement of a structure, the cost of which equals or exceeds 50 percent of the market value of the structure before the "start of construction" of the improvement. This term includes structures that have incurred "repetitive loss or substantial damage" regardless of the actual repair work performed. The term does not include improvements of structures to correct existing violations of state or local health, sanitary, or safety code requirements or any alteration of a "historic structure", provided that the alteration will not preclude the structures continued designation as a "historic structure".

(lxxxii) **Suspension** means the removal of a participating community from the NFIP because the community has not enacted and/or enforced the proper floodplain management regulations required for participation in the NFIP.

(lxxxiii) **Variance** is a grant of relief from the requirements of this ordinance, which permits construction in a manner otherwise prohibited by this ordinance where specific enforcement would result in unnecessary hardship.

(lxxxiv) **Violation** means the failure of a structure or other development to be fully compliant with this ordinance. A structure or other development without the elevation, other certification, or other evidence of compliance required in this ordinance is presumed to be in violation until such time as that documentation is provided.

(lxxxv) **Watercourse** means a lake, river, creek, stream, wash, channel or other topographic feature on or over which waters flow at least periodically. Watercourse includes specifically designated areas in which substantial flood damage may occur.

(lxxxvi) **Water surface elevation** means the height, in relation to the North American Vertical Datum of 1988 (NAVD 88) or National Geodetic Vertical Datum (NGVD) of 1929, (or other datum where specified) of floods of various magnitudes and frequencies in the floodplains of riverine areas.

(lxxxvii) **X zone** means the area where the flood hazard is less than that in the SFHA. Shaded X zones shown on recent FIRMs (B zones on older FIRMs) designate areas subject to inundation by the flood with a 0.2 percent chance of being equaled or exceeded (the 500-year flood). Unshaded X zones (C zones on older FIRMs) designate areas where the annual exceedance probability of flooding is less than 0.2 percent.

(lxxxviii) **Zone** means a geographical area shown on a FHBM or FIRM that reflects the severity or type of flooding in the area.

(lxxxix) **Zone A** (see definition for A zone)

(xc) **Zone B, C, and X** means areas identified in the community as areas of moderate or minimal hazard from the principal source of flood in the area. However, buildings in these zones could be flooded by severe, concentrated rainfall coupled with inadequate local drainage systems. Flood insurance is available in participating communities but is not required by regulation in these zones. (Zone X is used on new and revised maps in place of Zones B and C.)

(3) General Provisions

(a) Lands to Which This Ordinance Applies

This ordinance shall apply to all SFHAs within the jurisdiction of LaGrange County

(b) Basis for Establishing Regulatory Flood Data

This ordinance's protection standard is the regulatory flood. The best available regulatory flood data is listed below. Whenever a party disagrees with the best available data, the party submitting the detailed engineering study needs to replace existing data with better data and submit it to the Indiana Department of Natural Resources for review and approval.

(i) The regulatory flood elevation, floodway and fringe limits for the studied SFHAs within the jurisdiction of LaGrange County shall be as delineated on the one percent annual chance flood profiles in the Flood Insurance Study of the LaGrange County, Indiana and Incorporated Areas dated November 20, 2013 and the corresponding Flood Insurance Rate Map prepared by the Federal Emergency Management Agency dated November 20, 2013, as well as any future updates, amendments or revisions, prepared by the Federal Emergency Management Agency with the most recent date.

(ii) The regulatory flood elevation, floodway, and fringe limits for each of the SFHAs within the jurisdiction of LaGrange County, delineated as an "A Zone" on the LaGrange County, Indiana and Incorporated Areas Flood Insurance Rate Map prepared by the Federal Emergency Management Agency and dated November 20, 2013 as well as any future updates, amendments, or revision, prepared by the Federal Emergency Management Agency with the most recent dates shall be according to the best data available as provided by the Indiana Department of Natural Resources; provided the upstream drainage area from the subject site is greater than one square mile.

(iii) In the absence of a published FEMA map, or absence of identification on a FEMA map. The regulatory flood elevation, floodway, and fringe limits of any watercourse in the community's known flood prone areas shall be according to the best data available as provided by the Indiana Department of Natural Resources: provided the upstream drainage area from the subject site is greater than one square mile.

(c) Establishment of Floodplain Development Permit

A Floodplain Development Permit shall be required in conformance with the provisions of this ordinance prior to the commencement of any development activities in areas of special flood hazard.

(d) Compliance

No structure shall hereafter be located, extended, converted or structurally altered within the SFHA without full compliance with the terms of this ordinance and other applicable regulations. No land or stream within the SFHA shall hereafter be altered without full compliance with the terms of this ordinance and other applicable regulations.

(e) Abrogation and Greater Restrictions

This ordinance is not intended to repeal, abrogate, or impair any existing easements, covenants, or deed restrictions. However, where this ordinance and another conflict or overlap, whichever imposes the more stringent restrictions shall prevail.

(f) Discrepancy between Mapped Floodplain and Actual Ground Elevations

(i) In cases where there is a discrepancy between the mapped floodplain (SFHA) on the FIRM and the actual ground elevations, the elevation provided on the profiles shall govern.

(ii) If the elevation of the site in question is below the base flood elevation, that site shall be included in the SFHA and regulated accordingly.

(iii) If the elevation (natural grade) of the site in question is above the base flood elevation, that site shall be considered outside the SFHA and the floodplain regulations will not be applied. The property owner should be advised to apply for a LOMA.

(g) Interpretation

In the interpretation and application of this ordinance all provisions shall be:

(i) Considered as minimum requirements;

(ii) Liberally construed in favor of the governing body; and,

(iii) Deemed neither to limit nor repeal any other powers granted under state statutes.

(h) Warning and Disclaimer of Liability

The degree of flood protection required by this ordinance is considered reasonable for regulatory purposes and is based on available information derived from engineering and scientific methods of study. Larger floods can and will occur on rare occasions. Therefore, this ordinance does not create any liability on the part of LaGrange County, the Indiana Department of Natural Resources, or the State of Indiana, for any flood damage that results from reliance on this ordinance or any administrative decision made lawfully there under.

(i) Penalties for Violation

Failure to obtain a Floodplain Development Permit in the SFHA or failure to comply with the requirements of a Floodplain Development Permit or conditions of a variance shall be deemed

to be a violation of this ordinance. All violations shall be considered a common nuisance and be treated as such in accordance with the provisions of the Zoning Code for LaGrange County. All violations shall be punishable by a fine not less than $25.00 per day no more than $500.00 per day.

(i) A separate offense shall be deemed to occur for each day the violation continues to exist.

(ii) The LaGrange County Planning Commission shall inform the owner that any such violation is considered a willful act to increase flood damages and therefore may cause coverage by a Standard Flood Insurance Policy to be suspended.

(iii) Nothing herein shall prevent the County from taking such other lawful action to prevent or remedy any violations. All costs connected therewith shall accrue to the person or persons responsible.

(4) Administration

(a) Designation of Administrator

The Board of Commissioners of LaGrange County hereby appoints the Zoning Administrator to administer and implement the provisions of this ordinance and is herein referred to as the Floodplain Administrator.

(b) Permit Procedures

Application for a Floodplain Development Permit shall be made to the Floodplain Administrator on forms furnished by him or her prior to any development activities, and may include, but not be limited to, the following plans in duplicate drawn to scale showing the nature, location, dimensions, and elevations of the area in question; existing or proposed structures, earthen fill, storage of materials or equipment, drainage facilities, and the location of the foregoing. Specifically the following information is required:

(i) <u>Application Stage.</u>

A.) A description of the proposed development;

B.) Location of the proposed development sufficient to accurately locate property and structure in relation to existing roads and streams;

C.) A legal description of the property site;

D.) A site development plan showing existing and proposed development locations and existing and proposed land grades;

E.) Elevation of the top of the lowest floor (including basement) of all proposed buildings. Elevation should be in NAVD 88 or NGVD 1929.

F.) Elevation (in NAVD 88 or NGVD 1929) to which any non-residential structure will be flood proofed; and

G.) Description of the extent to which any watercourse will be altered or related as a result of proposed development.

(ii) Construction Stage

Upon placement of the lowest floor; or flood proofing, it shall be the duty of the permit holder to submit to the Floodplain Administrator a certification of the NGVD elevation of the lowest floor or flood proofed elevation, as built. Said certification shall be prepared by or under the direct supervision of a registered land surveyor or professional engineer and certified by the same. When flood proofing is utilized for a particular structure said certification shall be prepared by or under the direct supervision of a professional engineer or architect and certified by same. Any work undertaken prior to submission of the certification shall be at the permit holders' risk. (The Floodplain Administrator shall review the lowest floor and flood proofing elevation survey data submitted.) The permit holder shall correct deficiencies detected by such review before any further work is allowed to proceed. Failure to submit the survey or failure to make said corrections required hereby, shall be cause to issue a stop-work order for the project.

(c) Duties and Responsibilities of the Floodplain Administrator

The Floodplain Administrator and/or designated staff is hereby authorized and directed to enforce the provisions of this ordinance. The administrator is further authorized to render interpretations of this ordinance, which are consistent with its spirit and purpose. Duties and Responsibilities of the Floodplain Administrator shall include, but not be limited to:

(i) Review all floodplain development permits to assure that the permit requirements of this ordinance have been satisfied;

(ii) Inspect and inventory damaged structures in SFHA and complete substantial damage determinations;

(iii) Ensure that construction authorization has been granted by the Indiana Department of Natural Resources for all development projects subject to Article 5, Section(H)(5)(e) and (g)(i) of this ordinance, and maintain a record of such authorization (either copy of actual permit or floodplain analysis/regulatory assessment.)

(iv) Ensure that all necessary federal or state permits have been received prior to issuance of the local floodplain development permit. Copies of such permits are to be maintained on file with the floodplain development permit;

(v) Notify adjacent communities and the State Floodplain Coordinator prior to any alteration or relocation of a watercourse, and submit copies of such notifications to FEMA;

(vi) Maintain for public inspection and furnish upon request local permit documents, damaged structure inventories, substantial damage determinations, regulatory flood data, SFHA maps, Letters of Map Amendment (LOMA), Letters of Map Revision (LOMR), copies of DNR permits and floodplain analysis and regulatory assessments (letters of recommendation), federal permit documents, and “as-built” elevation and flood proofing data for all buildings constructed subject to this ordinance.

(vii) Utilize and enforce all Letters of Map Revision (LOMR) or Physical Map Revisions (PMR) issued by FEMA for the currently effective SFHA maps of the community.

(viii) Assure that maintenance is provided within the altered or relocated portion of said watercourse so that the flood-carrying capacity is not diminished;

(ix) Verify and record the actual elevation of the lowest floor (including basement) of all new or substantially improved structures, in accordance with Article 5, Section (H)(4)(b);

(x) Verify and record the actual elevation to which any new or substantially improved structures have been flood proofed, in accordance with Article 5, Section (H)(4)(b);

(xi) Review certified plans and specifications for compliance.

(5) Provisions for Flood Hazard Reduction

(a) General Standards

In all SFHAs the following provisions are required:

(i) New construction and substantial improvements shall be anchored to prevent flotation, collapse or lateral movement of the structure;

(ii) Manufactured homes shall be anchored to prevent flotation, collapse, or lateral movement. Methods of anchoring may include, but are not limited to, use of over-the-top or frame ties to ground anchors. This standard shall be in addition to and consistent with applicable state requirements for resisting wind forces;

(iii) New construction and substantial improvements shall be constructed with materials and utility equipment resistant to flood damage below the FPG;

(iv) New construction and substantial improvements shall be constructed by methods and practices that minimize flood damage;

(v) Electrical, heating, ventilation, plumbing, air conditioning equipment and other service facilities shall be designed and/or located so as to prevent water from entering or accumulating within the components during conditions of flooding;

(vi) New and replacement water supply systems shall be designed to minimize or eliminate infiltration of flood waters into the system;

(vii) New and replacement sanitary sewage systems shall be designed to minimize or eliminate infiltration of flood waters into the system;

(viii) On-site waste disposal systems shall be located and constructed to avoid impairment to them or contamination from them during flooding;

(ix) Any alteration, repair, reconstruction or improvements to a structure that is in compliance with the provisions of this ordinance shall meet the requirements of “new construction” as contained in this ordinance; and,

(x) Any alteration, repair, reconstruction or improvement to a structure that is not in compliance with the provisions of this ordinance, shall be undertaken only if said non-conformity is not further, extended, or replaced.

(b) Specific Standards

In all SFHAs, the following provisions are required:

(i) In addition to the requirements of Article 5, Section A, all structures to be located in the SFHA shall be protected from

flood damage below the FPG. This building protection requirement applies to the following situations:

A.) Construction or placement of any new structure having a floor area greater than 400 square feet.

B.) Addition or improvement made to any existing structure:

1.) Where the cost of the addition or improvement equals or exceeds 50% of the value of the existing structure (excluding the value of the land).

2.) With a previous addition or improvement constructed since the community's first floodplain ordinance.

C.) Reconstruction or repairs made to a damaged structure where the costs of restoring the structure to it's before damaged condition equals or exceeds 50% of the market value of the structure (excluding the value of the land) before damage occurred.

D.) Installing a travel trailer or recreational vehicle on a site for more than 180 days.

E.) Installing a manufactured home on a new site or a new manufactured home on an existing site. This ordinance does not apply to returning the existing manufactured home to the same site it lawfully occupied before it was removed to avoid flood damage.

(ii) <u>Residential Construction</u>

New construction or substantial improvement of any residential structure (or manufactured home) shall have the lowest floor; including basement, at or above the FPG (two feet above the base flood elevation). Should solid foundation perimeter walls be used to elevate a structure, openings sufficient to facilitate the unimpeded movements of floodwaters shall be provided in accordance with the standards of Article 5, Section (H)(5)(b)(iv).

(iii) <u>Non-Residential Construction</u>

New construction or substantial improvement of any commercial, industrial, or non-residential structure (or manufactured home) shall have the lowest floor, including basement, elevated to or above the FPG (two feet above the base flood elevation). Structures located in all “A

Zones" may be flood proofed in lieu of being elevated if done in accordance with the following:

A.) A Registered Professional Engineer or Architect shall certify that the structure has been designed so that below the FPG, the structure and attendant utility facilities are watertight and capable of resisting the effects of the regulatory flood. The structure design shall take into account flood velocities, duration, rate of rise, hydrostatic pressures, and impacts from debris or ice. Such certification shall be provided to the official as set forth in Article 5, Section (H)(4)(c)(x).

B.) Flood proofing measures shall be operable without human intervention and without an outside source of electricity.

(iv) Elevated Structures

New construction or substantial improvements of elevated structures shall have the lowest floor at or above the FPG.

Elevated structures with fully enclosed areas formed by foundation and other exterior walls below the flood protection grade shall be designed to preclude finished living space and designed to allow for the entry and exit of floodwaters to automatically equalize hydrostatic flood forces on exterior walls. Designs must meet the following minimum criteria:

A.) Provide a minimum of two openings located in a minimum of two exterior walls (having a total net area of not less than one square inch for every one square foot of enclosed area).

B.) The bottom of all openings shall be no more than one foot above the exterior grade or the interior grade immediately beneath each opening, whichever is higher.

C.) Openings may be equipped with screens, louvers, valves or other coverings or devices provided they permit the automatic flow of floodwaters in both directions.

D.) Access to the enclosed area shall be the minimum necessary to allow for parking for vehicles (garage door) or limited storage of maintenance equipment used in connection with the premises (standard exterior door) or entry to the living area (stairway or elevator).

E.) The interior portion of such enclosed area shall not be partitioned or finished into separate rooms.

F.) The interior grade of such enclosed area shall be at an elevation at or higher than the exterior grade.

(v) Structures Constructed on Fill

A residential or nonresidential structure may be constructed on a permanent land fill in accordance with the following:

A.) The fill shall be placed in layers no greater than 1 foot deep before compacting to 95% of the maximum density obtainable with the Standard Proctor Test method.

B.) The fill should extend at least ten feet beyond the foundation of the structure before sloping below the FPG.

C.) The fill shall be protected against erosion and scour during flooding by vegetative cover, riprap, or bulkheading. If vegetative cover is used, the slopes shall be no steeper than 3 horizontal to 1 vertical.

D.) The fill shall not adversely affect the flow of surface drainage from or onto neighboring properties.

E.) The top of the lowest floor including basements shall be at or above the FPG.

(vi) Standards for Manufactured Homes and Recreational Vehicles

Standards for Manufactured Homes and Recreational Vehicles. Manufactured homes and recreational vehicles to be installed or substantially improved on a site for more than 180 days must meet one of the following requirements:

A.) The manufactured home shall be elevated on a permanent foundation such that the lowest floor shall be at or above the FPG and securely anchored to an adequately anchored foundation system to resist flotation, collapse, and lateral movement. This requirement applies to all manufactured homes to be placed on a site;

1.) outside a manufactured home park or subdivision;

2.) in a new manufactured home park or subdivision;

3.) in an expansion to an existing manufactured home park or subdivision; or

4.) in an existing manufactured home park or subdivision on which a manufactured home has incurred "substantial damage" as a result of a flood.

B.) The manufactured home shall be elevated so that the lowest floor of the manufactured home chassis is supported by reinforced piers or other foundation elevations that are no less than 36 inches in height above grade and be securely anchored to an adequately anchored foundation system to resist flotation, collapse, and lateral movement. This requirement applies to all manufactured homes to be placed on a site in an existing manufactured home park or subdivision that has not been substantially damaged by a flood.

C.) Recreational vehicles placed on a site shall either:

1.) be on site for less than 180 days; and,

2.) be fully licensed and ready for highway use (defined as being on its wheels or jacking

3.) system, is attached to the site only by quick disconnect type utilities and security

4.) devices, and has no permanently attached additions); or

5.) meet the requirements for “manufactured homes” as stated earlier in this section.

(vii) <u>Excavation</u>

Whenever any portion of the SFHA is authorized for use, the volume of space which will be occupied by the authorized fill or structure below the BFE shall be compensated for and volume of excavation taken below the BFE. The excavation volume shall be at least equal to the volume of storage lost (replacement ration of 1 to 1) due to the fill or structure.

A.) The excavation shall take place in the floodplain and in the same immediate watershed in which the authorized fill or structure is located;

B.) Under certain circumstances, the excavation may be allowed to take place outside of, but adjacent to, the

floodplain provided that the excavated volume will be below the regulatory flood elevation, will be in the same immediate watershed in which the authorized fill or structure is located, will be accessible to the regulatory flood water, will not be subject to ponding when not inundated by flood water, and that it shall not be refilled;

C.) The fill or structure shall not obstruct a drainage way leading to the floodplain;

D.) The fill or structure shall be of a material deemed stable enough to remain firm and in place during the periods of flooding and shall include provisions to protect adjacent property owners against any increased runoff or drainage resulting from its placement; and;

E.) Plans depicting the areas to be excavated and filled shall be submitted prior to the actual start of construction or any site work; once site work is complete, but before the actual start of construction, the applicant shall provide to the floodplain administrator a certified survey of the excavation and fill sites demonstrating the fill and excavation comply with this article.

(c) Standards for Subdivision Proposals

(i) All subdivision proposals shall be consistent with the need to minimize flood damage;

(ii) All subdivision proposals shall have public utilities and facilities such as sewer, gas, electrical, and water systems located and constructed to minimize flood damage;

(iii) All subdivision proposals shall have adequate drainage provided to reduce exposure to flood hazards, and;

(iv) Base flood elevation data shall be provided for subdivision proposals and other proposed development (including manufactured home parks and subdivisions), which is greater than the lesser of fifty lots or five acres.

(d) Critical Facility

Construction of new critical facilities shall be, to the extent possible, located outside the limits of the SFHA. Construction of new critical facilities shall be permissible within the SFHA if no feasible alternative site is available. Critical facilities constructed within the SFHA shall have the lowest floor elevated to or above

the FPG at the site. Flood proofing and sealing measures must be taken to ensure that toxic substances will not be displaced by or released into floodwaters. Access routes elevated to or above the FPG shall be provided to all critical facilities to the extent possible.

(e) Standards for Identified Floodways

(i) Located within SFHAs, established in Article 5, Section (H)(3)(b), are areas designated as floodways. The floodway is an extremely hazardous area due to the velocity of floodwaters, which carry debris, potential projectiles, and has erosion potential. If the site is in an identified floodway, the Floodplain Administrator shall require the applicant to forward the application, along with all pertinent plans and specifications, to the Indiana Department of Natural Resources and apply for a permit for construction in a floodway. Under the provisions of IC 14-28-1 a permit for construction in a floodway from the Indiana Department of Natural Resources is required prior to the issuance of a local building permit for any excavation, deposit, construction or obstruction activity located in the floodway. This includes land preparation activities such as filling, grading, clearing and paving etc. undertaken before the actual start of construction of the structure. However, it does exclude non-substantial additions/improvements to existing (lawful) residences in a non-boundary river floodway. (IC 14-28-1-26 allows construction of non-substantial additions/ improvements to residences in a non-boundary river floodway without obtaining a permit for construction in a floodway from the Indiana Department of Natural Resources. Please note that if fill is needed to elevate an addition above the existing grade, prior approval (construction in a floodway permit) for the fill is required from the Indiana Department of Natural Resources.)

(ii) No action shall be taken by the Floodplain Administrator until a permit (when applicable) has been issued by the Indiana Department of Natural Resources granting approval for construction in a floodway. Once a permit for construction in a floodway has been issued by the Indiana Department of Natural Resources, the Floodplain Administrator may issue the local Floodplain Development Permit, provided the provisions contained in Article 5, Section (H)(5) of this ordinance have been met. The Floodplain Development Permit cannot be less restrictive than the permit for construction in a floodway issued by the Indiana Department of Natural Resources. However, a

community's more restrictive regulations (if any) shall take precedence.

(iii) No development shall be allowed which acting alone or in combination with existing or future development, will increase the regulatory flood more than 0.14 of one foot; and

(iv) For all projects involving channel modifications or fill (including levees) the County shall submit the data and request that the Federal Emergency Management Agency revise the regulatory flood data.

(f) Standards for Identified Fringe

If the site is located in an identified fringe, then the Floodplain Administrator may issue the local Floodplain Development Permit provided the provisions contained in Article 5, Section (H)(5) of this ordinance have been met. The key provision is that the top of the lowest floor of any new or substantially improved structure shall be at or above the FPG.

(g) Standards for SFHAs without Established Base Flood Elevation and/or Floodways/Fringes

(i) Drainage area upstream of the site is greater than one square mile:

A.) If the site is in an identified floodplain where the limits of the floodway and fringe have not yet been determined, and the drainage area upstream of the site is greater than one square mile, the Floodplain Administrator shall require the applicant to forward the application, along with all pertinent plans and specifications, to the Indiana Department of Natural Resources for review and comment.

B.) No action shall be taken by the Floodplain Administrator until either a permit for construction in a floodway or a floodplain analysis/regulatory assessment citing the 100 year flood elevation and the recommended Flood Protection Grade has been received from the Indiana Department of Natural Resources.

C.) Once the Floodplain Administrator has received the proper permit for construction in a floodway or floodplain analysis/regulatory assessment approving the proposed development, a Floodplain Development Permit may be issued provided the conditions of the Floodplain Development Permit are not less restrictive than the conditions received from the Indiana

Department of Natural Resources and the provisions contained in Article 5, Section (H) (5) of this ordinance have been met.

(ii) Drainage area upstream of the site is less than one square mile:

A.) If the site is in an identified floodplain where the limits of the floodway and fringe have not yet been determined and the drainage area upstream of the site is less than one square mile, the Floodplain Administrator shall require the applicant to provide an engineering analysis showing the limits of the floodway, fringe and 100 year flood elevation for the site.

B.) Upon receipt, the Floodplain Administrator may issue the local Floodplain Development Permit, provided the provisions contained in Article 5, Section (H)(5) of this ordinance have been met.

(iii) The total cumulative effect of the proposed development, when combined with all other existing and anticipated development, will not increase the regulatory flood more than 0.14 of one foot and will not increase flood damages or potential flood damages.

(h) Standards for Flood Prone Area.

All development in known flood prone areas not identified on FEMA maps, or where no FEMA published map is available, shall meet applicable standard as required per Article 5.

(6) Variance Procedures

(a) Designation of Variance and Appeals Board

The Board of Zoning Appeals as established by the County Commissioners of LaGrange County shall hear and decide appeals and requests for variances from requirements of this ordinance.

(b) Duties of Variance and Appeals Board

The board shall hear and decide appeals when it is alleged an error in any requirement, decision, or determination is made by the Floodplain Administrator in the enforcement or administration of this ordinance. Any person aggrieved by the decision of the board may appeal such decision to the Circuit Court as provided by State Statute.

(c) Variance Procedures

In passing upon such applications, the Board of Zoning Appeals shall consider all technical evaluations, all relevant factors, all standards specified in other sections of this ordinance, and;

(i) The danger of life and property due to flooding or erosion damage;

(ii) The susceptibility of the proposed facility and its contents to flood damage and the effect of such damage on the individual owner;

(iii) The importance of the services provided by the proposed facility to the community;

(iv) The necessity to the facility of a waterfront location, where applicable;

(v) The availability of alternative locations for the proposed use which are not subject to flooding or erosion damage;

(vi) The compatibility of the proposed use with existing and anticipated development;

(vii) The relationship of the proposed use to the comprehensive plan and floodplain management program for that area;

(viii) The safety of access to the property in times of flood for ordinary and emergency vehicles;

(ix) The expected height, velocity, duration, rate of rise, and sediment of transport of the floodwaters at the site; and,

(x) The costs of providing governmental services during and after flood conditions, including maintenance and repair of public utilities and facilities such as sewer, gas, electrical, and water systems, and streets and bridges.

(d) Conditions for Variances

(i) Variances shall only be issued when there is:

A.) A showing of good and sufficient cause;

B.) A determination that failure to grant the variance would result in exceptional hardship; and,

C.) A determination that the granting of a variance will not result in increased flood heights, additional threats to public safety, extraordinary public expense, create nuisances, cause fraud or victimization of the public, or conflict with existing laws or ordinances.

(ii) No variance for a residential use within a floodway subject to Article 5, Section (H)(5)(e) or (g)(i) of this ordinance may be granted.

(iii) Any variance granted in a floodway subject to Article 5, Section (H)(5)(e) or (g)(i) of this ordinance will require a permit from the Indiana Department of Natural Resources.

(iv) Variances to the Provisions for Flood Hazard Reduction of Article 5, Section (H)(5)(b), may be granted only when a new structure is to be located on a lot of one-half acre or less in size, contiguous to and surrounded by lots with existing structures constructed below the flood protection grade.

(v) Variances shall only be issued upon a determination that the variance is the minimum necessary, considering the flood hazard, to afford relief.

(vi) Variances may be granted for the reconstruction or restoration of any structure individually listed on the Register of Historic Places or the Indiana State Survey of Historic Architectural, Archaeological and Cultural Sites, Structures, Districts, and Objects.

(vii) Any application to which a variance is granted shall be given written notice specifying the difference between the base flood elevation and the elevation to which the lowest floor is to be built and stating that the cost of the flood insurance will be commensurate with the increased risk resulting from the reduced lowest floor elevation (See Section e).

(viii) The Floodplain Administrator shall maintain the records of appeal actions and report any variances to the Federal Emergency Management Agency or the Indiana Department of Natural Resources upon request (See Section e).

(e) Variance Notification

Any applicant to whom a variance is granted shall be given written notice over the signature of a community official that:

(i) The issuance of a variance to construct a structure below the base flood elevation will result in increased premium rates for flood insurance up to amounts as high as $25 for $100 of insurance coverage; and;

(ii) Such construction below the base flood level increases risks to life and property.

The Floodplain Administrator will maintain a record of all variance actions, including justification for their issuance, and report such variances issued in the community's biennial report submission to the Federal Emergency Management Agency.

(f) Historic Structure

Variances may be issued for the repair or rehabilitation of "historic structures" upon a determination that the proposed repair or rehabilitation will not preclude the structure's continued designation as an "historic structure" and the variance is the minimum to preserve the historic character and design of the structure.

(g) Special Conditions

Upon the consideration of the factors listed in Article 5, Section (H)(6), and the purposes of this ordinance, the Board of Zoning Appeals may attach such conditions to the granting of variances as it deems necessary to further the purposes of this ordinance.

(7) Severability

If any section, clause, sentence, or phrase of the Ordinance is held to be invalid or unconstitutional by any court of competent jurisdiction, then said holding shall in no way effect the validity of the remaining portions of this Ordinance.

(8) Effective Date

This ordinance shall take effect upon its passage by the LaGrange County Commissioners.

Passed and enacted by the Board of Commissioners of LaGrange County, Indiana on the _____ day of _____, [Year].

THIS PAGE IS INTENTIONALLY LEFT BLANK

Article 6: Nonconforming Uses

(A) General Provisions

(1) Purpose and Intent

Nonconforming uses are declared by this Ordinance to be incompatible with permitted uses in the districts involved. It is the general policy of the County to allow legally existing uses and structures to continue in productive use, but also to bring these uses as nearly into compliance with existing regulations as is reasonably possible. In furtherance of that policy, these regulations are intended to do the following:

(a) Recognize the interests of property owners in continuing to use their property;

(b) Promote reuse and rehabilitation of existing buildings; and

(c) Place reasonable limits on the expansion and alteration of nonconformities that have the potential to adversely affect surrounding properties or the community as a whole.

(2) Applicability

This ordinance applies to nonconformities created by initial adoption or amendments to this Ordinance. It also applies to nonconformities that were legal nonconformities under previously applicable ordinances, even if the type or extent of nonconformity is different.

(3) Continuation Permitted

Any nonconformity that legally exists on the effective date of this Ordinance or that becomes nonconforming upon the adoption of any amendment to this Ordinance may be continued in accordance with the provisions of this Ordinance.

(4) Determination of Nonconforming Status

(a) The burden of establishing that any nonconformity is a legal nonconformity shall, in all cases, is solely upon the owner of such nonconformity.

(b) An illegal nonconforming use shall not be validated by the adoption of this Ordinance.

(c) The casual, intermittent, temporary or illegal use of land, buildings or premises shall not be sufficient to establish the existence of a nonconforming use and the existence of a nonconforming use on part of a lot or tract shall not be construed to establish a nonconforming use on the entire lot or tract.

(5) Repairs and Maintenance

Incidental repairs and normal maintenance of nonconformities shall be permitted unless such repairs increase the extent of nonconformity or are otherwise expressly prohibited by this Ordinance. Nothing in this Ordinance shall be construed to prevent structures from being structurally strengthened or restored to a safe condition, in accordance with an order of a public official.

(B) Nonconforming Use

(1) Existing Nonconforming Use

The lawful nonconforming use of a structure, land, or water existing at the time of the adoption or amendment of this Ordinance may be continued although the use does not conform with the provisions of this Ordinance. However, only the portion of the land or water in actual use may be so continued, and the structure or area within which the use is contained may not be extended, enlarged, reconstructed, substituted, moved, or structurally altered except when required to do so by law or official order, so as to comply with the provisions of this Ordinance.

(2) Total Lifetime Structural Repairs

Total lifetime structural repairs or structural alterations to a structure with a nonconforming use shall not exceed 50% of the assessed value of the structure at the time it became a nonconforming structure and use unless it is permanently changed to conform to the use provisions of this Ordinance.

(3) Change of Use

(a) Change to Conforming Use

A nonconforming use may be changed to any use that is allowed in the zoning district in which it is located, subject to all standards and requirements applicable to the new use. Once a nonconforming use is converted to a conforming use it may not be changed back to a nonconforming use.

(b) Change to Other Nonconforming Use

The Board of Zoning Appeals may approve as a conditional use a change of use to a use not otherwise allowed in the underlying zoning districts if it finds that the new proposed use will be no more injurious than the previous use or will decrease the extent of the nonconformity. If the Board approves such a change of use, it shall be authorized to impose conditions it deems necessary to reduce or minimize any potentially adverse effect upon other

property in the neighborhood, and to carry out the general purpose and intent of this Ordinance.

(c) Substitution of New Equipment

The Board of Zoning Appeals may permit the substitution of new equipment (e.g., fencing, mechanical equipment) if such equipment will reduce the incompatibility of the nonconforming use with neighboring uses.

(4) Loss of Legal Nonconformity Status

(a) Discontinuance

If such nonconforming use is discontinued or terminated for a period of 12 months, any future use of the structure, land, or water shall conform to the provisions of this Ordinance.

(b) Damage or Destruction

When a structure containing a nonconforming use is damaged by fire, explosion, flood, accident, act of vandalism, or other calamity it may be restored. To the maximum extent possible, such restoration shall comply with the use provisions of this Ordinance.

(5) Residential Uses Excepted

Notwithstanding other provisions of this Section, a lawfully established residential use rendered nonconforming by adoption of this Ordinance or future amendment may be enlarged, altered or reconstructed; provided, that: the following criteria are met:

(a) Such residential use complies with the setback requirements in Article 4, Section 5, except in the case of a destroyed or damaged structure to be rebuilt using the same foundation destroyed or damaged structure.

(b) The residence is the only principal use on the lot.

(C) Legal Lots of Record

(1) In any district in which a principal use is permitted, a principal use and customary accessory uses may be erected on any single lot of record at the effective date of adoption or amendment of this Title, notwithstanding limitations imposed by other provisions of this Ordinance; provided, that such lot must be in separate ownership and not of continuous frontage with other lots in the same ownership.

(2) The provision of Subsection (1) of this Section shall apply even though such lot fails to meet the requirements for area or width, or both, that are generally applicable in the district; provided that setback dimensions and requirements other than those applying to area or width, or both, of the

lot shall conform to the regulations for the district in which such lot is located. Variance of setback requirements shall be obtained only through action of the Board of Zoning Appeals.

(3) No division of land shall be made after the effective date of this ordinance which creates a lot with width or area below the requirements stated in this Ordinance.

(D) Nonconforming Sites

The provisions of this Article apply to properties containing permitted uses but which do not comply with development standards of this ordinance, such as landscaping, parking, loading, or signs. Whenever a nonconforming use of a structure or a nonconforming structure is expanded or changed in such a manner as to require landscaping, such landscaping shall be installed before a certificate of occupancy is issued, unless a financial guarantee is posted under the terms of Article 4, Section (H) (3) of the Subdivision Control Ordinance.

Article 7: Administration

(A) Administrative and Decision Making Bodies

The Board of County Commissioners, the Plan Commission, the Board of Zoning Appeals, and the staff have administrative and decision-making responsibilities with regard to this Ordinance as set forth in this Section. The table below summarizes their roll.

Table 7-A-1

REVIEW AND DECISION-MAKING AUTHORITY S = Staff Review R = Review and Recommend D = Final Decision A = Appeal						
Process	**Staff**	**Plat Committee**	**Executive Committee**	**Plan Commission**	**Board of Zoning Appeals**	**County Commissioners**
Map Amendment (Rezoning)	S		R	R		D
Text Amendment	S		R	R		D
Preliminary Planned Unit Development	S			R		D
Final Planned Unit Development	S			D		A
Development Plan (Primary Approval)	S			D		
Variance	S				D	
Conditional Use	S				D	
Administrative Adjustment	D					
Certificate of Zoning Compliance	D			A	A	
Interpretation	D				A	
Animal Feeding Operation	S	D		A		

(1) Board of County Commissioners

(a) General Authority

As provided in Chapter 36-2 of the Indiana Code, the Board of County Commissioners serves as the executive and as the legislative body of LaGrange County.

(b) In accordance with IC 36-7-4-208, the Board of County Commissioners shall appoint one of its members to serve as a member of the Plan Commission.

(c) In accordance with IC 36-7-4-208, the Board of County Commissioners shall appoint five citizen members to serve as members of the Plan Commission, no more than three of whom may be of the same political party. Each citizen member shall be appointed because of the member's knowledge and experience in community affairs, the member's awareness of the social, economic, agricultural, and industrial problems of the area, and the member's interest in the development and integration of the area. A citizen member may not hold other elective or appointive office in municipal, county, or state government. Citizen members shall reside in the unincorporated area of LaGrange County, or as provided in IC 36-7-4-410, in a municipality within the county that has designated the LaGrange County Plan Commission as its plan commission.

(d) The Board of County Commissioners, acting as the legislative body, shall, after report and recommendation from the Plan Commission, approve or deny any proposed amendment to this Ordinance.

(e) If the Commissioners reject or amend a proposal recommended favorably by the Plan Commission, the Commissioners shall return the proposal to the Plan Commission with the written reasons for the rejection or amendment, as provided in IC 36-7-4-607.

(f) As provided in IC 36-7-4-607 and 608, if the Commissioners fail to act on a recommendation from the Plan Commission within the time limit prescribed by the Indiana Code, the Plan Commission recommendation stands as if the Commissioners had acted upon it.

(2) County Council

(a) General Authority

The County Council shall in the annual budget provide appropriate funding for the Plan Commission and the conduct of its affairs.

(b) In accordance with IC 36-7-4-208, the County Council shall appoint one of its members to serve as a member of the Plan Commission.

(3) Plan Commission

(a) Powers and Duties

(i) The Plan Commission shall adopt rules for the conduct of its hearings and shall adopt by rule a schedule of reasonable fees for the following:

(ii) Processing and hearing administrative appeals and petitions for rezoning, conditional uses, and variances;

(iii) Issuing permits; and

(iv) Other official actions taken in accordance with IC 36-7-4

(v) The Plan Commission shall provide for notice and conduct public hearings on amendments to the map or text of this ordinance, final planned unit developments, and development plans.

(vi) The Plan Commission shall forward proposals to amend the zoning map or the text of this Ordinance to the Board of County Commissioners with a favorable, unfavorable, or no recommendation in accordance with IC 36-7-4-607 and 608 and the Plan Commission's Rules of Procedure.

(vii) The Plan Commission shall hear and approve, approve with conditions, or deny final planned unit developments and development plans as provided in Article 5, Sections (E) and (F) of this Ordinance.

(viii) The Plan Commission may appoint a Hearing Officer. The Hearing Officer shall have the following powers and duties: The right to hear and approve or deny variances from the development standards of the Zoning Ordinance except a lot size variance. A development standard variance may be approved by the Hearing Officer only upon written determination as prescribed in this Article under Section 7.C.3.

(b) Membership

The membership of the LaGrange County Plan Commission shall be appointed in accordance with IC 36-7-4-208.

(4) Board of Zoning Appeals

(a) Powers and Duties

(i) The Board of Zoning Appeals shall hear and decide all applications for variances and conditional uses and all appeals from administrative decisions made under the provisions of this Ordinance.

(ii) The Board of Zoning Appeals shall provide for Public notice to interested parties of hearings before the board in accordance with IC 5-3-1-2 and IC 5-3-1-4 at least 10 days before the date set for the hearing. The Board shall, by rule, determine who are interested parties, how notice is to be given to them, and who is required to give that notice. The party taking the appeal or applying for the exception, use, or variance, may be required to assume the cost of public notice and due notice to interested parties.

(iii) The staff may appear before the Board at the hearing and present evidence relevant to the effect on the Comprehensive Plan or Zoning Ordinance of the granting of a variance or the determination of any other matter.

(iv) The Board of Zoning Appeals shall make a decision on any matter that it is required to hear either at the meeting at which the matter is first presented, or at the conclusion of the hearing on that matter, if it is continued. Within five days of making a decision, the Board shall file a written copy of its decision in the office of the Board.

(v) The Board shall keep minutes of its proceedings, keep records of its examinations and other official actions, prepare findings and record the specifics of each vote on all actions taken. All minutes and records shall be filed in the offices of the Board and shall be a public record.

(vi) The Board of Zoning Appeals shall adopt rules of procedure concerning the filing of appeals, applications for variances, and conditional uses, giving of notice, conduct of hearings and other such matters as may be necessary to carry out its duties under this Ordinance. At the first meeting of each year, the Board shall elect a Chair and Vice-Chair from among its members.

(b) Divisions

In accordance with IC 36-7-4-902, three divisions of the Board of Zoning Appeals are hereby established, as follows:

(i) Division 1 shall have authority over all matters within the unincorporated area of LaGrange County and within the Town of Shipshewana.

(ii) Division 2 shall have authority over all matters within the Town of LaGrange.

(iii) Division 3 shall have authority over all matters within the Towns of Topeka and Wolcottville

(c) Membership

Each division of the Board of Zoning Appeals shall consist of five members appointed as follows:

(i) Division 1:

A.) Three citizen members residing in the unincorporated area of LaGrange County or of the Town of Shipshewana, appointed by the Board of County Commissioners, of whom one shall be a member of the Plan Commission and two shall not be members of the Plan Commission;

B.) One citizen member residing in the unincorporated area of LaGrange County or of the Town of Shipshewana, appointed by the County Council, who shall not be a member of the Plan Commission;

C.) One member, who shall be a citizen member or the county extension educator, appointed by the Plan Commission from its membership.

(ii) Division 2:

A.) One citizen member of the Plan Commission, appointed by the Town Council of the Town of LaGrange;

B.) Three citizen members who reside in the Town of LaGrange, appointed by the Town Council of the Town of LaGrange;

C.) One member who shall be a citizen member or the county extension educator, appointed by the Plan Commission from its membership.

(iii) Division 3:

A.) One citizen member of the Plan Commission, appointed by the Board of County Commissioners;

B.) One citizen member who resides in the Town of Wolcottville, appointed by the Town Council of the Town of Wolcottville;

C.) One citizen member who resides in the town of Topeka, appointed by the Town Council of the Town of Topeka

D.) One citizen member who resides in the Town of Topeka or the Town of Wolcottville, appointed jointly

by the town councils of the Towns of Wolcottville or Topeka;

E.) One member who shall be a citizen member or the county extension educator, appointed by the Plan Commission from its membership.

(d) Limitation on Refiling

Any petition approved by the Board of Zoning Appeals, unless otherwise stipulated, shall expire and become void one year after the date of its granting unless the petitioner or his agent has substantially put into effect the use on the property for which the petition was approved. Within 90 days of approval of a petition, the petitioner shall apply for an improvement location permit, zoning compliance certificate, or building permit as appropriate.

(e) Majority Vote Required

An affirmative vote by a majority of the Board of Zoning Appeals shall be required to approve or deny a petition before the Board.

(5) Staff

(a) Authority

The staff shall have the authority to take those lawful actions necessary to enforce the terms of this Ordinance on behalf of the Plan Commission and Board of Zoning Appeals.

(b) Powers and Duties

The authority to perform inspections, review applications, issue permits, and grant administrative adjustments is hereby delegated to the staff.

(i) The staff is authorized to issue zoning compliance certificates as described in Article 1, Section (G) (1).

(ii) The staff is authorized to make inspections of all lands located within the jurisdiction of the Plan Commission in order to enforce this Ordinance. In order to execute inspections, the staff shall have the right to enter upon any premises at any reasonable time for the purpose of carrying out their duties in the enforcement of these regulations. If the owner or occupant of the premises refuses to permit entry, the staff may make application to any judge of the Circuit or Superior Courts of LaGrange County, Indiana, for the issuance of an administrative search warrant. Such application shall identify the premises upon which entry is sought and the purpose for which entry is desired. The application shall state the facts giving rise to the belief that a violation of these regulations exists on such premises.

(iii) The staff is authorized to approve administrative adjustments of no more than 10% to any numerical dimensional or intensity standard in accordance with the following criteria:

A.) The adjustment is requested because it eliminates an unnecessary inconvenience to the applicant and will have no significant adverse impact on the health, safety or general welfare of surrounding property owners or the general public;

B.) The requested administrative modification is of a technical nature and is required to compensate for some unusual aspect of the site or the proposed development that is not shared by landowners in general.

C.) The adjustment does not alter access to property nor on-site circulation;

D.) The adjustment does not decrease the amount of off-street parking to an amount not adequate for the use. In determining the amount of parking that is adequate, the staff shall consider the amount otherwise required by the zoning ordinance for this use, the information available from the Institute of Traffic Engineers, empirical studies of the parking needs for the use;

(c) Interpretation

The Zoning Administrator is hereby authorized to interpret the various provisions of this Ordinance. The Zoning Administrator's interpretation may be appealed to the Board of Zoning Appeals. The Zoning Administrator shall follow the rules of interpretation contained in Article 9.

(B) Amendments

Table 7-B-1

	Map Amendment (Rezoning)	Text Amendment
Initiating Entity	Land Owners Plan Commission County Commissioners	Plan Commission County Commissioners
Public Hearing	Plan Commission	Plan Commission
Returned to PC*	No	Yes

*See Article 7; Section (A) (3)

(1) Map Amendments

(a) Initiation

Map amendments may be initiated by the owners of 50% or more of the area involved in the petition, by the Plan Commission, or by the Board of County Commissioners.

(b) Criteria

In preparing and considering proposals to amend the zoning ordinance, the Plan Commission and County Commissioners shall pay reasonable regard to the following matters in accordance with state law (I.C. 36-7-4-603):

(i) The comprehensive plan;

(ii) Current conditions and the character of current structures and uses in each district;

(iii) The most desirable use for which the land in each district is adapted;

(iv) The conservation of property values throughout the jurisdiction;

(v) Responsible development and growth.

(c) Procedure

(i) The Plan Commission shall give notice and hold a public hearing on each proposed amendment. Notice shall be given in a manner prescribed in the Commission Rules of Procedure to interested parties as defined in those rules. After the hearing, the Plan Commission may make a favorable, unfavorable, or no recommendation to the County Commissioners.

(ii) The County Commissioners shall consider the recommendation, if any, of the Plan Commission before acting on a proposal to amend the zoning map. The County Commissioners shall approve or deny the request as provided by Indiana law.

(2) Text Amendments

(a) Initiation

Text amendments may be initiated by the Plan Commission or by the County Commissioners.

(b) Criteria

The criteria for text amendments shall be the same as those set forth in Article 7, Section (B) (1).

(c) Procedure

(i) The Plan Commission shall give notice and hold a public hearing on each proposed amendment as set forth in IC 5-3-1. After the hearing, the Plan Commission may make a favorable, unfavorable, or no recommendation to the County Commissioners.

(ii) The County Commissioners shall consider the recommendation, if any, of the Plan Commission before acting on a proposal to amend the text of the zoning ordinance. The County Commissioners shall approve, reject, or amend the proposal as provided by Indiana law.

(3) Written Commitments

When considering an amendment to the zoning map, the Plan Commission may require or allow the petitioner to submit written commitments, as specified in IC 36-7-4-615, that restrict the use(s) and/or developmental standards of the proposed zoning district.

(a) Initial Rezoning - Written commitments may be initiated by the Plan Commission, the petitioner, or by the County Commissioners.

(b) In approving written commitments for developmental standards, the County Commissioners may stipulate that such commitments may not be modified by the Plan Commission without the County Commissioners' consent.

(c) Modifications or termination of commitments after initial zoning - The Plan Commission may modify or terminate written commitments relating to the development standards after notice is provided in accordance with the Plan Commission rules of procedure. The modification may be initiated by the owner of the property, by the Commission, or by the County Commissioners. If the commitments to be modified are subject to the stipulation in Subsection (b) above, the modification must be forwarded to the County Commissioners for final action.

(d) Modifications or termination of commitments involving permitted uses may be allowed only through the same procedure as the initial rezoning. In approving, modifying, or terminating commitments, the Plan Commission shall consider the factors listed in Article 7, Section (B) (1).

(e) The written commitments shall be recorded in accordance with the I.C. 36-7-4-615. Recorded commitments are binding on the owner

of the parcel, a subsequent owner of a parcel, and any person who acquires an interest in the parcel. An ordinance amending the zoning map that includes written commitments shall not be effective until the commitments are recorded. After the ordinance is adopted and the commitments are recorded, the zoning map shall be amended to indicate the new district designation with the letter “C” appended to indicate that commitments accompany the district designation. The commitments must be recorded within 90 days after the County Commissioners adopt the amendment, unless the Plan Commission grants an extension. In the event the commitments are not recorded within the specified time, the ordinance shall not take effect and shall be considered null and void.

(f) A zoning compliance certificate shall not be issued for any property subject to written commitments unless the use and development on the property comply with the recorded written commitments.

(g) Any violations associated with written commitments are subject to the penalties in Article 8.

(C) Variances

(1) General

(a) The Board of Zoning Appeals shall grant a variance from the terms of this ordinance only if all applicable criteria are met.

(b) Variance applications shall be filed in accordance with the BZA Rules of Procedure.

(c) Whenever the decision of the Board is conditioned upon the petitioner's compliance with a requirement imposed by the Board concerning construction or site development (e.g., installation of landscaping, fencing, paving, curb stops or any comparable requirement) and such condition is recited in the notice to the petitioner of the Board's decision, petitioner shall be required to notify the staff in writing of the timely fulfillment of such requirement. If the time for fulfillment of the condition is stated in the Board's decision, the written notification must be received within 90 days after the commencement of the use or completion of construction authorized by the Board's decision, whichever is earlier.

(d) Failure to comply with any conditions imposed by the Board of Zoning Appeals shall constitute a violation enforceable by governmental authority pursuant to the provisions of Article 8.

(e) If it deems advisable, the Board may require or permit the petitioner to make written commitments concerning the use or development of the subject property. The commitments shall be reduced to writing in recordable form and signed by the owner(s) of the real estate. The commitments shall authorize their recording by the Administrative Official in the office of the Recorder of LaGrange County, Indiana,

(i) The Board may require in such commitment the designation of any specially affected persons or categories of specially affected persons, who (in addition to persons entitled to receive notice of the hearing under Article 7, Section (C) (5)) shall be entitled to enforcement thereof pursuant to Article 8 of this Ordinance.

(ii) The commitments may be modified or terminated by a decision of the Board of Zoning Appeals made at public hearing after proper notice has been given. Any modification or termination of the commitments approved by the Board shall not be in full force and effect until reduced to writing by the present owner(s) of the real estate, endorsed by the Board, and recorded in the office of the Recorder of LaGrange County, Indiana

(2) Use Variance

The BZA may grant a request for a use variance only if all of the following criteria are met:

(a) The approval will not be injurious to the public health, safety, and general welfare of the community;

(b) The use and value of the area adjacent to the property included in the variance will not be affected in a substantially adverse manner;

(c) The need for the variance arises from some condition peculiar to the property involved;

(d) The strict application of the terms of the zoning ordinance will constitute an unnecessary hardship if applied to the property for which the variance is sought; and

(e) The approval does not interfere substantially with the Comprehensive Plan.

(3) Development Standards Variance

The BZA may grant a request for a development standards variance only if all of the following criteria are met:

(a) The approval will not be injurious to the public health, safety, and general welfare of the community;

(b) The use and value of the area adjacent to the property included in the variance will not be affected in a substantially adverse manner;

(c) The strict application of the terms of the zoning ordinance will result in practical difficulties in the use of the property; and

(d) The variance granted is the minimum necessary and does not correct a hardship caused by an owner, previous or present, of the property.

(4) Conditions and Commitments

The Board may require all such conditions and commitments as it deems necessary in the public interest. Such conditions and commitments shall be subject to the requirements of Section (C) (e).

(5) Notice and Hearing

The BZA shall give notice and hold a public hearing as required by Indiana law and in accordance with the Board's Rules of Procedure.

(6) Findings of Fact

The Board shall make written findings of fact on all applicable criteria and shall provide the applicant with a copy of the findings.

(D) Conditional Uses

(1) General

(a) The Board of Zoning Appeals shall hear and decide only such conditional uses as are specifically authorized by this Ordinance. The Board shall approve only those conditional uses that are found to meet the criteria in this Section and shall deny any conditional use that is inconsistent with the purposes and intent of this Ordinance.

(b) The Board shall impose such safeguards and conditions on the granting of a conditional use that the Board finds necessary to ensure that the purposes of this Ordinance are met.

(2) Criteria

The Board shall not grant a conditional use unless it finds that the following criteria are met, as applicable:

(a) There will be adequate ingress and egress to property and proposed structures thereon with particular reference to automotive and pedestrian safety and convenience, traffic flow and control and access in case of fire or other catastrophe.

(b) Off-street parking and loading areas, will be adequate for the use

(c) Adequate utilities are available to serve the use.

(d) Adequate landscaping and buffering will be provided.

(e) Signs and proposed exterior lighting will be adequate and will not be a nuisance.

(f) The use will meet required setback distances, yards and other open space provisions of this Ordinance.

(g) The proposed use will be compatible with adjoining properties, with reference to site development standards designed for their mutual protection and the environmental harmony of the district.

(E) Administrative Appeals

(1) Authority

The Board of Zoning Appeals shall hear and decide appeals where it is alleged there is error in any of the requirements, decision or determination made by an administrative official or body charged with the administration and enforcement of this Ordinance.

(2) Application

(a) Any person aggrieved by any decision of an authorized official concerning interpretation, administration or enforcement may file an appeal with the BZA.

(b) An appeal shall specify the ground thereof and shall be filed within 30 days of the decision alleged to be in error. The administrative official or body from whom the appeal is taken shall forthwith transmit to the Board all documents, plans and papers constituting the record of the action from which the appeal is taken.

(c) The Board of Zoning Appeals may, so long as such action is in conformity with this Ordinance, reverse or affirm, wholly or partly, or may modify the order, requirements, decision or determination appealed from and may make such order, requirements, decision or determination as in its opinion ought to be made, and to that end shall have the powers of the administrative official or body from whom the appeal is taken.

(F) Planned Unit Developments

(1) Initiation

A petition to rezone property to PUD or to modify an approved PUD may be filed by any of the following:

(a) The owners of all lots or parcels within the area proposed for rezoning;

(b) In the case of a single lot or parcel with multiple owners, all those having ownership interest in the lot or parcel.

(2) Hearing and Decision

(a) The Plan Commission shall hold a public hearing and make a recommendation to the County Commissioners on the proposed PUD ordinance and PUD zoning in the same manner as for a map amendment. The Plan Commission may recommend approval or disapproval of the rezoning request. The Commission may impose conditions on a favorable recommendation and/or request written commitments in accordance with Article 7, Section (B) (3) of this Ordinance.

(b) The County Commissioners may impose reasonable conditions on a proposed PUD and allow or require the owner of the real property to make written commitments in accordance with Article 7, Section (B) (3) of this Ordinance.

(c) Adoption of the PUD ordinance by the County Commissioners constitutes final approval of the Preliminary PUD Plan. After the PUD ordinance is adopted, the Plan Commission shall exercise continuing jurisdiction. The Plan Commission is hereby authorized to conduct secondary reviews, grant approvals, and make modifications to Approved Detailed PUD Plans. The Commission shall not modify the Preliminary PUD Plan or any condition or commitment allowed or required by the County Commissioners.

(3) Modification Procedure

(a) In the exercise of its continuing jurisdiction, the Plan Commission may from time to time allow the petitioner to modify the approved detailed PUD in a manner consistent with the approved Preliminary PUD Plan to allow for changed circumstances and conditions unforeseen at the time of original approval. Except as provided below, such modifications shall be considered in the same manner as the secondary review, and notice shall be given and a hearing held in accordance with the Commission's Rules of Procedure.

(b) The staff is authorized to approve administrative adjustments as specified in Article 7, Section (F) (5).

(4) Review Procedure

(a) An application for rezoning to PUD shall include or incorporate by reference those materials specified in the Plan Commission Rules of Procedure.

(b) The Plan Commission shall conduct secondary review as specified in Indiana law and further described in this section.

(i) The Commission may approve a detailed PUD plan only after a public hearing. Notice shall be given to interested parties and the hearing conducted in accordance with the Commission's Rules of Procedure.

(ii) No development shall take place until the Commission has approved a detailed PUD plan. If a subdivision plat is filed in conjunction with the detailed PUD plan, appropriate plans and details listed below may be included on the subdivision plat rather than on the PUD plan. The detailed PUD plan or subdivision plat shall include such information and materials as are required by the Plan Commission Rules of Procedure.

(iii) Approval of the detailed PUD plan shall be granted only upon a finding by the Commission that the plan is consistent with the approved Preliminary PUD Plan.

(iv) The Approved Detailed PUD Plan shall be marked, "Approved Detailed Planned Unit Development," be signed by the president and secretary of the Commission, and bear the Commission's seal. One copy shall be permanently retained in the offices of the Plan Commission. No permits shall be issued until the detailed plan and all accompanying documents have been recorded in the Office of the LaGrange County Recorder.

(v) Any decision of the Plan Commission to approve or deny approval of a detailed PUD plan hereunder is a final decision that may be appealed to the County Commissioners, provided that any refusal by the Commission to approve a detailed PUD plan shall not limit the right of the petitioner to continue to seek approval, nor shall it impair the right of the petitioner to request an extension of time for approval, if no appeal is filed.

(vi) The Plan Commission may allow the petitioner to develop the property involved in phases. If such phasing is permitted, the petitioner shall submit detailed PUD plans that correspond to the phases involved, and the phases shall be developed in the order approved by the Commission. Such detailed PUD plans for phases, when approved, shall be treated in the same manner as the Approved Detailed PUD Plan for an entire PUD.

(vii) Where platting, or replatting of streets within all or a portion of the land involved is contemplated, the Plan Commission

shall handle such matters in accordance with its regular procedures in accordance with law.

(c) No construction or installation work shall be done on any public improvement until satisfactory plans and specifications therefore have been approved by the Plan Commission as part of the Approved Detailed PUD Plan or as part of a subdivision in accordance with the Subdivision Control Ordinance.

(5) Administrative Adjustments

Minor modifications are changes that do not do any of the following:

(a) Alter the basic relationship of the proposed development to adjacent property.

(b) Change the uses permitted.

(c) Increase any of the following by more than 15% (this total is cumulative for all modifications to the PUD):

(i) The maximum density.

(ii) The maximum floor area.

(iii) The maximum height.

(iv) Decrease the amount of off-street parking to an amount not adequate for the use. In determining the amount of parking that is adequate, the staff shall consider the amount otherwise required by the zoning ordinance for this use, the information available from the Institute of Traffic Engineers and empirical studies of the parking needs for the use.

(v) Reduce the approved yards or setbacks by more than 15%.

(vi) Alter site ingress or egress in any way or create a substantial change to on-site circulation, as determined by the appropriate engineering or highway department.

(d) Upon receiving a request for a minor modification, the staff shall have 10 working days to respond to the petitioner, by either approving or rejecting the request. An applicant may appeal the decision of the staff to the Plan Commission.

(6) Abandonment or Expiration

(a) The County Commissioners' approval of the Preliminary PUD Plan shall be valid for two years after the date the County Commissioners adopts the PUD ordinance. Within this two-year period the PUD shall receive approval of the final detailed PUD plan for the first section or the entire development. Should the planned development not receive approval of the detailed PUD plan for at least one section or the entire development within the

two years, the County Commissioners, Plan Commission, or property owner may initiate a rezoning of the property. The Plan Commission may extend the approval period, not to exceed five successive periods of no more than two years each. The approval of the detailed PUD plan for each section of the Preliminary PUD Plan shall extend the approval length of the Preliminary PUD Plan for two years.

(b) Commission approval of a detailed PUD plan shall expire if the plan is not recorded within six months after the approval date. Commission approval of a detailed PUD plan shall expire after a period of five years from the approval of a Detailed PUD unless the development in any phase has been substantially begun and pursued with due diligence. The Commission may grant extensions of time not to exceed five successive periods of no more than two years each. If the detailed PUD plan expires as provided in this section, the Commission may require the plan to be resubmitted for approval, and it shall conduct a secondary review as if the plan were a new filing. Alternatively, the Commission may opt to initiate a rezoning of the property to a classification other than PUD.

(c) A development approved under this Ordinance shall be deemed to be abandoned or discontinued if it has expired under this Section or when no improvements have been made pursuant to the detailed PUD plan for a period of 24 consecutive months. When a PUD has been abandoned or discontinued, the detailed PUD plan shall no longer be valid, and no development shall be permitted until the plan is re-approved, and/or the property is rezoned.

(7) Permits and Enforcement

(a) The staff shall not issue any permit for development or improvements in a PUD District unless all recording required by this Ordinance has been effected. No certificate of completion or occupancy shall be issued for a PUD District unless the development complies with the approved Detailed PUD.

(b) All development shall be in conformity with the approved detailed PUD. In the exercise of its continuing jurisdiction, the Plan Commission shall take cognizance of any material deviations from the approved Detailed PUD and take appropriate enforcement action. Only those uses shown on the Approved Detailed PUD Plan shall be permitted; all other uses are prohibited.

(8) Covenants and Maintenance; Financial Guarantees

(a) Covenants may be required by the Commission as an ingredient for stability and longevity of the PUD. If submitted, the covenants shall set forth in detail provisions for the ownership, administration,

and maintenance of facilities held in common so as to ensure their continuity and conservation. Such covenant provisions shall include specific remedies in the event facilities held in common are permitted to deteriorate or are not maintained in a condition consistent with the best interests of the County, and in such event the County, may take those remedial steps provided for such provision. The covenants shall be recorded with the detailed PUD plan.

(b) The Commission may require the recording of covenants for any reasonable public or semipublic purpose, including but not limited to the allocation of land by the petitioner for public thoroughfares, parks, schools, recreational facilities and other public and semipublic purposes wherever necessary in conformity with the land use plan of current adoption. Such covenants may provide that if a governmental unit or agency thereof does not proceed with acquisition of the allocated land within the specified period of time, the applicable elements of the covenants shall automatically terminate. If such termination occurs, the petitioner shall then submit for approval by the Commission a modified detailed PUD plan for such land consistent with the approved Preliminary PUD Plan. Such modified detailed PUD plans, when approved, shall be treated in the same manner as Approved Detailed PUD Plans for an entire PUD.

(c) The Commission may require the recording of covenants for any other reasonable purpose, including but not limited to imposing standards for development of property in a PUD. Such development standards may include, but are not limited to, requirements as to the following:

(i) Lot area.

(ii) Floor area.

(iii) Ratios of floor space to land area.

(iv) Buildable area or the area in which structures may be built.

(v) Open space

(vi) Setback lines and minimum yards.

(vii) Building separations.

(viii) Height of structures.

(ix) Signs.

(x) Off-street parking and loading space.

(xi) Design standards.

(xii) Phasing of development.

(d) Enforcement of the covenants shall be the responsibility of the property owners, unless the County, a city, or a town is, with its consent, specifically made a party to one or more covenants. Public enforcement shall apply only to those covenants to which a public entity is a party.

(e) The petitioner shall provide financial assurance for the satisfactory installation of all public facilities in the form of bonds or such other assurances as are required in the normal procedures of platting pursuant to the provisions of the Subdivision Control Ordinance.

(f) Adequate provision shall be made for a private organization with direct responsibility to and control by the property owners involved to provide for the operation and maintenance of all common facilities, including private streets. Assurances or guarantees, satisfactory to the Plan Commission shall be provided to demonstrate that the private organization is self-perpetuating and adequately funded to accomplish its purposes.

(g) Common facilities that are not dedicated to the public shall be maintained to standards assuring continuous and adequate maintenance at a reasonable and nondiscriminatory rate of charge to the beneficiaries thereof. Common facilities not dedicated to the public shall be operated and maintained at no expense to any governmental unit.

(h) All private streets shall be maintained by the responsible private organization in such a manner that adequate access is provided at all times to vehicular traffic, so that fire, police, health, sanitation and public utility vehicles can serve the properties contiguous or adjacent thereto, and so that such vehicles will have adequate maneuvering area. Such private streets shall be developed in accordance with the Subdivision Control Ordinance.

(i) As a condition of approval, the Plan Commission and/or County Commissioners shall require any appropriate financial guarantees to insure the timely completion of any improvement related to the PUD as required by the subdivision control ordinance.

(G) Development Plans

(1) Primary Approval

(a) An applicant for development plan approval shall submit an application accompanied by all information, materials and fees required by the Plan Commission Rules of Procedure.

(b) The Plan Commission shall determine if the development plan is consistent with the comprehensive plan; and satisfies the development requirements specified in this Ordinance.

(c) The Plan Commission may do the following:

(i) Impose conditions on the approval of a development plan if the conditions are reasonably necessary to satisfy the development requirements specified in the zoning ordinance for approval of the development plan.

(ii) Provide that approval of a development plan is conditioned on the furnishing to the Plan Commission of a bond or written assurance that:

A.) Guarantees the timely completion of a proposed public improvement in the proposed development; and

B.) Is satisfactory to the Plan Commission.

(iii) Permit or require the owner of real property to make a written commitment as provided in Article 7, Section (B) (3).

(d) The Plan Commission shall make written findings concerning each decision to approve or disapprove a development plan. The Plan Commission president is hereby designated as the official authorized to sign the written findings.

(2) Secondary Approval

The staff is hereby authorized to grant secondary approval of Development Plans. After meeting all conditions of primary approval, the applicant may submit the development plan for secondary approval. The staff shall review the application and if all conditions have been met, the staff shall grant secondary approval. Any refusal to grant secondary approval may be appealed to the Plan Commission.

(H) Other Administrative Provisions

(1) Beneficial Use Determination

The purpose of this Section is to establish procedures and regulations for the provision of relief from substantial economic hardship arising from the application of zoning and other land development regulations to private property located in LaGrange County. This Section is further intended and shall be construed to objectively and fairly review claims by private property owners that any such application of the Zoning Ordinance requires appropriate relief, yet preserve the ability of the county to lawfully regulate real property and fulfill its other duties and obligations to people of the County.

(2) Findings

The County Commissioners make the following findings:

(a) To further the public interest in land development, the County has enacted new zoning regulations.

(b) In some very limited situations, the application of such zoning or other land development regulations may deny a property owner all reasonable use of his property and consequently effect a taking under the United States Constitution.

(c) To preserve and protect private property rights, an administrative process is desirable that would afford appropriate relief in those instances where zoning regulations lead to denial of a land development application and create a substantial economic hardship.

(d) Such an administrative economic hardship/taking relief process would provide LaGrange County a quick and flexible means to respond to valid economic hardship and taking claims without necessarily incurring the time-consuming and significant expense of litigating such a claim in the courts.

(3) Economic Hardship/Taking Standard

For purposes of this Ordinance, a substantial economic hardship shall be defined as a denial of all reasonable economic use of the property. Upon a finding that the denial of the application has resulted in a denial of all reasonable economic use of the property, LaGrange County may provide the petitioner with appropriate relief from the zoning regulations as set forth in this Ordinance.

(4) Hardship Relief Petition

Any applicant for development, after a final decision on his application is rendered by the Plan Commission, County Commissioners, or Board of Zoning Appeals, may file a Hardship Relief Petition with the County Auditor seeking relief from the zoning regulations on the basis that the denial of the application has created a substantial economic hardship, depriving the applicant of all reasonable use of property.

(a) Affected Property Interest

The Hardship Relief Petition must provide information sufficient for the County Attorney to determine that the petitioner possesses a protectable interest in property under the Fifth Amendment to the United States Constitution.

(b) Time for Filing Notice of Petition and Petition

No later than 10 calendar days from final action by the Plan Commission, County Commissioners, or Board of Appeals on any development plan or other type of zoning application, the applicant shall file a Notice of Petition in writing with the County Auditor.

Within 30 days of the filing of a Notice of Petition, the applicant shall file a Hardship Relief Petition with the County Auditor.

(c) Information to Be Submitted with Hardship Relief Petition

The hardship relief petition must be submitted on a form prepared by the Zoning Administrator, and must be accompanied by the materials and information specified in the Plan Commission Rules of Procedure.

(5) Determination of Substantial Economic Hardship

(a) Prior to the appointment of a Hearing Officer, and based on a review of documents submitted by the petitioner, the County Commissioners, upon advice of the County Administrator and the County Attorney, shall within 30 days after the petition is filed, make a determination whether the petitioner has made a prima facie case that the subject property has suffered a denial of all reasonable use that amounts to a substantial economic hardship. Upon such showing of a prima facie case, a Hearing Officer shall be appointed and a full review of the hardship petition may proceed.

(b) If upon the advice of the County Administrator and the County Attorney, the County Commissioners find that the petitioner has not made a prima facie case of economic hardship as defined above, the petition for hardship relief shall be denied and no Hearing Officer shall be appointed.

(6) Hearing Officer

(a) The County Commissioners shall, within 30 days following a preliminary determination of hardship appoint a Hearing Officer to review information by the petitioner, to hold a public hearing to determine whether there is an affected property interest and whether a substantial economic hardship has been created as a result of the final action on the application, and to make a recommendation to the County Commissioners concerning approval or denial of the Hardship Relief Petition.

(b) Every appointed Hearing Officer shall have demonstrated experience in either development, real estate finance, real estate analysis, real estate consulting, real estate appraisal, planning, real estate or zoning law, or in other real estate related disciplines sufficient to allow understanding, analysis, and application of the economic hardship standard. Prior to appointment, the Hearing Officer shall submit a statement of no potential or actual conflict of interest. The Hearing Officer shall not be an employee or officer of LaGrange County.

(7) Public Hearing

(a) Within 10 days following appointment of the Hearing Officer, written notice of a public hearing shall be published and posted in accordance with IC 5-3-1.The hearing shall be held within 30 days following the final date of written notice, unless both the County Administrator and the petitioner agree to a reasonable extension of time.

(b) All public hearings conducted by the Hearing Officer to consider an economic hardship petition shall be conducted in accord with the rules and administrative procedures adopted by the County Commissioners to govern such actions.

(8) Determination on Petition

In applying the economic hardship standard in this Section, the Hearing Officer shall consider, among other items, the following information or evidence:

(a) Any estimates from contractors, appraisers, architects, real estate analysts, qualified developers, or other competent and qualified real estate professionals concerning the feasibility, or lack of feasibility, of construction or development on the property as of the date of the application, and in the reasonably near future.

(b) Any evidence or testimony of the market value of the property both under the uses allowed by the existing regulations and any proposed use; and

(c) The petitioner shall have the burden of proving that the denial of the application created a substantial economic hardship under the standard provided in Section (H) (3) above.

(d) The Hearing Officer shall, on the basis of the evidence and testimony presented, make the following specific findings as part of his report and recommendations to the County Commissioners.

(i) Whether the petitioner has complied with the requirements for presenting the information to be submitted with a Hardship Relief Petition;

(ii) Whether the petitioner has a protectable interest in the property;

(iii) The market value of the property considering the existing zoning regulations;

(iv) The market value of the property under the proposed use;

(v) Whether there exists a feasible alternative use that could provide a reasonable economic use of the property;

(vi) The market value of, or benefit accruing from opportunities to cluster development on other remaining contiguous property owned by the petitioner eligible for such development as provided for in this Ordinance;

(vii) Whether it was feasible to undertake construction on or development of the property as of the date of the application, or in the reasonably near future thereafter; and

(viii) Whether, in the opinion of the Hearing Officer, the denial of the application would create a substantial economic hardship as defined in Section (H) (3).

(e) Report and Recommendations of the Hearing Officer

(i) The Hearing Officer, based upon the evidence and findings, shall make a report to the County Commissioners concerning the Hardship Relief Petition, which may include a recommendation for steps to be taken to offset any substantial economic hardship.

(ii) If the Hearing Officer recommends that the County Commissioners approve the Hardship Relief Petition, then the Hearing Officer's report shall discuss the type and extent of incentives necessary, in the opinion of the Hearing Officer, to provide an appropriate increase in market value or other benefit or return to the petitioner sufficient to offset the substantial economic hardship. The types of incentives that the Hearing Officer may consider include, but are not limited to, the following:

A.) A rezoning of the property to a more appropriate classification, issuance of a variance, approval of a zoning permit, or other appropriate land-use regulatory action that will enable the petitioner to realize a reasonable economic return on the property;

B.) A waiver of permit fees;

C.) Approval of development on some portion of the property; or

D.) Acquisition of all or a portion of the property at market value.

(iii) The report and recommendation shall be submitted to the County Commissioners and mailed to petitioner within 30 days after the conclusion of the public hearing, unless extended by mutual agreement.

(9) County Commissioners Review and Consideration

(a) The County Commissioners shall review the report and recommendations of the Hearing Officer and approve or disapprove the Hardship Relief Petition within 30 days after receipt of the Hearing Officer's report. Provided, however, that the County Commissioners may extend this period upon a finding that due to the size and complexity of the development or proposal and similar factors that additional review time is necessary.

(b) The County Commissioners may hold a public hearing and provide notice as set forth in Section (H) (7) of this Ordinance. Only new testimony and evidence shall be presented at any public hearing held by the County Commissioners

(c) The County Commissioners may adopt any legally available incentive or measure reasonably necessary to offset any substantial economic hardship as defined in Section (H) (3) and may condition such incentives upon approval of specific development plans.

(d) The decision of the County Commissioners shall not become final until it determines the provision of any such relief.

(10) Time Limits/Transferal of Relief or Incentives

Any relief or incentives adopted by the County Commissioners pursuant to this Ordinance may be transferred and utilized by successive owners of the property or parties in interest, but in no case shall the incentives be valid after the expiration date of a specific development approval.

Article 8: Enforcement

(A) Authority

The staff shall have the authority to take those lawful actions necessary to enforce the terms of this Ordinance on behalf of the Commission and Board. The zoning administrator of LaGrange County is hereby designated as the official responsible for administration of this ordinance. The staff is hereby authorized to perform those duties specified by IC 36-4-700 et seq. and such other duties as may be assigned to it from time to time by the Commission, Board, County Commissioners.

(1) Inspections

The authority to perform inspections, review applications and issue permits and citations is hereby delegated to the staff. The staff is authorized to make inspections of all lands located within the jurisdiction of the Commission in order to enforce this Ordinance. In order to execute inspections, the staff shall have the right to enter upon any premises at any reasonable time for the purpose of carrying out their duties in the enforcement of these regulations. If the owner or occupant of the premises refuses to permit entry, the staff may make application to any judge of the Circuit or Superior Courts of LaGrange County, Indiana, for the issuance of an administrative search warrant. Such application shall identify the premises upon which entry is sought and the purpose for which entry is desired. The application shall state the facts giving rise to the belief that a violation of these regulations exists on such premises.

(2) Stop-Work Orders

The staff is hereby granted the authority to issue a stop work order for any activity that is commenced without a permit required by this Ordinance or for any activity that is being carried out in a manner that violates this ordinance.

(B) Violations and Penalties

(1) Complaint

Whenever a violation of this Ordinance occurs or is alleged to have occurred, any person may file a written complaint. Such complaint stating fully the causes and basis thereof shall be filed with the staff. The staff shall properly record such complaint and investigate in a timely manner. If acts elicited by such investigation are sufficient to establish a reasonable belief that a violation has occurred on the part of the party investigated, such official shall issue a citation in accordance

with this Section and/or file with the County Attorney a complaint against such person requesting action thereon as provided by this Ordinance and in accordance with law.

(2) Nuisance Declared

Any buildings erected, raised or converted, or land or premises used in violation of any section of this Ordinance or regulation thereof is hereby declared to be a common nuisance and the owner thereof shall be liable for maintaining a common nuisance, which may be restrained or enjoined or abated in any appropriate action or proceeding.

(3) Penalties

Any person who violates any Section of this Ordinance or regulation thereof or fails to comply with any of its requirements, including violations of conditions and safeguards established in connection with this Ordinance, shall be guilty of an ordinance violation and upon conviction, shall be fined in a sum not less than $25 nor more than $500 for each day's violation.
The owner or tenant of any building, structure, premises or part thereof, and any architect, builder, contractor, realtor, agent or other person who commits, participates in, assists in or maintains such violation may each be found guilty of a separate offense and suffer the penalties herein provided.

(4) Injunction

The Commission, the Board or any designated administrative official may institute a suit or injunction in the Circuit or Superior Court of LaGrange County to restrain any person from violating the Sections of this Ordinance.
The Commission or the Board may institute a suit for mandatory injunction directing a person to remove a structure erected in violation of the Sections of this Ordinance or to make the same comply with its terms. If such Commission or Board is successful in its suit, the respondent shall bear the costs of the action including reasonable attorney's fees.

(5) Other Remedies

Nothing herein contained shall prevent the County, City or Town from taking such other lawful action as is necessary to prevent or remedy any violation.

(6) Citations

Any person who uses property in violation of this ordinance shall be deemed to have committed a civil zoning violation, and the staff may issue a citation. Each day a violation remains uncorrected is a distinct

and separate civil zoning violation subject to an additional citation and fine in the amount prescribed in Table 8-B-1.

Table 8-B-1

SCHEDULE OF FINES	
Violation	**Amount of Fine**
First Violation	$50
Second Violation	$100
Third Violation	$200
Fourth Violation	$350
Each Subsequent Violation	$500

In no event shall the total monetary fine for each civil zoning violation exceed $5,000.00. All fines prescribed by this Section for civil zoning violations shall be paid in accordance with the provisions of Indiana law and the ordinances of LaGrange County.

(a) The staff may issue a civil zoning violation to a person who commits a civil zoning violation to the legal owner, the contract vendee, or any person or entity with a possessor interest in the real estate upon which the violation occurs. The citation may be served by personal service, by certified mail, or by placement in a conspicuous place on the property where the violation occurs and shall serve as notice to a person that he or she has committed a civil zoning violation.

(b) No citation shall be issued for the first offense unless the person who commits a civil zoning violation, or the legal owner, the contract vendee, or any person or entity with a possessor interest in the real estate upon which the violation occurs has been issued a warning ticket. Unless a compliance deadline has already been established by the Board of Zoning Appeals or Plan Commission, an Improvement Location Permit, or Certificate of Occupancy, said person shall be allowed not less than 3 working days before the issuance of the citation to correct the violation. A longer time may be granted at the discretion of staff, based upon the nature of the violation and the time required to correct it, provided that the time allowed shall not exceed 30 calendar days.

(c) A person who receives a warning ticket or a citation may file a petition for a variance, conditional use, rezoning or other means provided by this Ordinance to correct the violation. A person who elects to file such a petition shall indicate this intent on the warning ticket or citation and return it to the staff within 3 working days. A person shall have 10 working days after issuance of the warning ticket to file the petition, and for violations involving permanent

signs, additional monetary fines shall be stayed upon receipt of the notice of intent. A person who files the petition within said time period shall pursue the petition in an expeditious fashion. If the petition is denied, withdrawn, or dismissed for want of prosecution, the Board shall establish a time limit for correction of the violation, not to exceed 30 calendar days. No fines shall be assessed during this correction period. After that time, if the civil zoning violation continues at the real estate, then a lawsuit will be commenced by the designated enforcement entity in a court of competent jurisdiction in LaGrange County, Indiana. A person who receives a citation under this Section and elects to file a petition shall not be entitled to a stay of additional monetary fines.

(d) A person who receives a citation may elect to stand trial for the offense by indicating on the citation his intent to stand trial and returning a copy of the citation to the issuing agency. The returned copy of the citation shall serve as notice of the person's intent to stand trial, and additional monetary fines shall be stayed upon receipt of the notice. The notice shall be given at least 5 working days before the date of payment set forth on the citation. On receipt of the notice of intention to stand trial, a lawsuit will be commenced by the county attorney in a court of competent jurisdiction in LaGrange County. The matter shall be scheduled for trial, and a Summons and an Order to Appear shall be served upon the Defendant.

(e) If a person who receives a citation fails to pay the assessed fine by the date of payment set forth in the citation and fails to give notice of his intention to stand trial as prescribed above, the county attorney may file a civil lawsuit as provided by applicable laws and seek penalties as prescribed in this Ordinance.

(f) A person adjudged to have committed a civil zoning violation is liable for the Court costs and fees. No cost shall be assessed against the enforcement agency in any such action.

(g) Seeking a civil penalty as authorized by this Section does not preclude the county from seeking alternative relief from the court in the same action, or from seeking injunctive relief or any other remedy in a separate action for the enforcement of this Ordinance.

(h) A change of venue from LaGrange County shall not be granted in such a case, as provided in IC 36-7-4-1014.

Article 9: Definitions and Rules of Interpretation

(A) Meaning and Intent

All provisions, terms, phrases, and expressions contained in this Ordinance shall be construed according to this Ordinance's stated purpose and intent.

(B) Text Controls

In case of any difference of meaning or implication between the text of this Ordinance and any heading, drawing, table, or figure, the text shall control.

(C) Lists and Examples

Unless otherwise specifically indicated, lists of items or examples that use terms such as "including, "such as," or similar language are intended to provide examples, not to be exhaustive lists of all possibilities.

(D) Computation of Time

Unless the terms of a specific provision state otherwise (e.g., some provisions specify "business days"), periods of time defined by a number of days shall mean a number of consecutive calendar days, including all weekend days, holidays, and other non-business/working days; however, if the last day is a Saturday, Sunday, or legal holiday, that day shall be excluded.

(E) References to Other Regulations, Publications and Documents

Whenever reference is made to a resolution, ordinance, statute, regulation, or document, that reference shall be construed as referring to the most recent edition of such regulation (as amended), resolution, ordinance, statute, regulation, or document or to the relevant successor document, unless otherwise expressly stated.

(F) Public Officials and Agencies

All public officials, bodies, and agencies to which references are made are those of LaGrange County, unless otherwise expressly stated. Whenever reference is made to a public official Ordinance or name of a public agency, that reference

shall be construed as referring to the most up-to-date Ordinance or agency name, or to the relevant successor official or agency.

(G) Delegation of Authority

Whenever a provision appears requiring the head of a department or another officer or employee of the County to perform an act or duty, that provision shall be construed as authorizing the department head or officer to delegate the responsibility to subordinates, unless the terms of the provision specify otherwise.

(H) Technical and Non-Technical Words

Words and phrases not otherwise defined in this Ordinance shall be construed according to the common and approved usage of the language, but technical words and phrases not otherwise defined in this Ordinance that may have acquired a peculiar and appropriate meaning in law shall be construed and understood according to such meaning.

(I) Mandatory and Discretionary Terms

The word “shall” is always mandatory, and the words “may” or “should” are always permissive.

(J) Conjunctions

Unless the context clearly suggests the contrary, conjunctions shall be interpreted as follows:

(1) And indicates that all connected items, conditions, provisions, or events shall apply; and

(2) Or indicates that one or more of the connected items, conditions, provisions, or events shall apply.

(K) Tense and Usage

Words used in one tense (past, present, or future) include all other tenses, unless the context clearly indicates the contrary. The singular shall include the plural, and the plural shall include the singular.

(L) Gender

The masculine shall include the feminine, and vice versa.

(M) Definitions

(1) Abandoned Sign

i. Any Sign the owner of which cannot be located at Owner's last address as reflected on the records of the Department; or

ii. Any Sign no longer fully supported by the structure designed to support the sign, for a consecutive one hundred twenty (120) day period.

Permanent signs applicable to a business temporarily suspended by change in ownership or management shall not be deemed abandoned unless the structure remains vacant for at least six (6) months.

(2) Accessory Lot means a parcel that is not intended to contain a principal use and is permanently tied to another lot that contains or may contain a principal use. An accessory lot must be contiguous to the lot with which it is associated or separated only by a right-of-way.

(3) Accessory Structure

(a) Major Accessory Structure means any temporary or permanent structure containing 80 square feet or more located on the same lot with the principal use or on an accessory lot. Major accessory structures include but are not limited to garages, storage sheds, and gazebos.

(b) Minor Accessory Structure means any temporary or permanent structure containing less than 80 square feet located on the same lot with the principal use or on an accessory lot. Minor accessory structures include but are not limited to doghouses, playhouses, and lawn ornaments.

(c) Accessory Apartment means a subordinate dwelling, having a single address, which has its own eating, sleeping and sanitation facilities, within a principal single-family residential building, designed so as to give no indication from the exterior of the building that there is a second dwelling unit. The owner of the building must reside in the principal residence or the accessory apartment.

(4) Adequate Assurance of Completion and Continued Operations of the WECS Project The term shall mean the financial commitments, insurance certificates, warranties, and all other information and data provided pursuant to the terms of this Ordinance.

(5) Adult Bookstore means an establishment having as a preponderance of its stock in trade or its dollar volume in trade, books, magazines, periodicals or other printed matter, or photographs, films, motion pictures, video cassettes, slides, tapes, records or other forms of visual or audio representations which are distinguished or characterized by their emphasis on matter depicting, describing or relating to Specified Sexual Activities or Specified Anatomical Areas.

(6) Adult Cabaret means a nightclub, bar, theater, restaurant or similar establishment which frequently features live performances by topless or bottomless dancers, go-go dancers, exotic dancers, strippers, or similar entertainers, where such performances are distinguished or characterized by an emphasis on specified sexual activities or by exposure of Specified Anatomical Areas or which regularly feature films, motion pictures, video cassettes, slides or other photographic reproductions which are distinguished or characterized by an emphasis upon the depiction or description of Specified Sexual Activities or Specified Anatomical Areas for observation by patrons.

(7) Adult Entertainment Business means an adult bookstore, Adult Motion Picture Theater, Adult Mini Motion Picture Theater, Adult Motion Picture Arcade, Adult Cabaret or Adult Service Establishment.

(8) Adult Live Entertainment Arcade means any Building or Structure which contains or is used for commercial entertainment where the patron directly or indirectly is charged a fee to view from an enclosed or screened area or booth a series of live dance routines, strip performances or other gyrational choreography which performances are distinguished or characterized by an emphasis on Specified Sexual Activities or by exposure of Specified Anatomical Areas.

(9) Adult Motion Picture Arcade means any place to which the public is permitted or invited wherein coin or slug-operated or electronically, electrically or mechanically controlled still or motion picture machines, projectors or other image-reducing devices are maintained to show images to 5 or fewer persons per machine at one time, and where the images so displayed are distinguished or characterized by an emphasis on depicting or describing Specified Sexual Activities or Specified Anatomical Areas.

(10) Adult Service Establishment means any building, structure, premises or other facility, or any part thereof, under common ownership or control which provides a preponderance of services involving Specified Sexual Activities or display of Specified Anatomical Areas.

(11) AFO. See Animal Feeding Operation.

(12) Agribusiness means facilities directed at meeting the needs of those engaged in local farming, such as the warehousing, sales, repair, and service of agricultural equipment, vehicles, feed or supplies. It also means facilities such as grain elevators and agricultural product processing plants as well as the wholesaling of agricultural products and livestock sales.

(13) Alley means a minor way that provides vehicular access to the back side of property that abuts a street.

(14) Ambient Baseline Sound Pressure Level the L90 A-weighted sound pressure emissions level (the level of sound exceeded 90% of the time) for a WECS project area prior to construction as determined by a baseline acoustics emissions study.

(15) Animal Unit is 1000 pounds of live animal weight from any and all livestock raised.

(16) Animal Feeding Operation (AFO) means a lot or facility where thirty (30) or more animal units have been, are, or will be stabled or confined and fed or maintained for a total of 45 days or more in any 12-month period, and crops, vegetation forage growth, or postharvest residues are not sustained in the normal growing season over any portion of the lot or facility. Animal feeding operation includes animal confinement buildings and animal waste storage facilities. Two or more animal feeding operations under common ownership are considered, for the purposes of these regulations, to be a single animal feeding operation if they adjoin each other. Livestock markets and sale barns are excluded. An Animal Feeding Operation which meets the criteria for a Concentrated Feeding Operation (CFO) or a Confined Animal Feeding Operation (CAFO) is thereby excluded as an Animal Feeding Operation and shall be required to meet the CFO or CAFO regulations set forth herein.

(17) Antenna means a device used to transmit and/or receive radio or electromagnetic waves between terrestrially and/or orbitally based structures.

(18) Applicant – The term "Applicant" when used in connection with or in respect of a WECS shall mean the person(s) and/or entity(ies) which is/are the developer and/or promoter of the WECS Project which prepares and files the initial application with Advisory Plan Commission for a WECS project, and the term shall include all successors and assigns of the initial Applicant. The term "Applicant" shall not include any person or entity which signs the application solely in the capacity as an Owner of an interest in real property in which the WECS shall be located.

(19) Automobile Body Shop means a use involving automobile painting and body repairs, straightening of frames and similar major repair work.

(20) Automobile Repair Shop means a use involving such automobile maintenance, servicing, repair such as tire sales and repair; replacement of mufflers and tailpipes, hoses, belts, fluids, and similar equipment; radiator cleaning, flushing, replacement and repair; greasing and lubrication; servicing and repair of carburetors, brakes and wiring; and similar activities.

(21) Backlot Development shall be defined as the development of land by subdivision or severance or by any other means within 500 ft. of a waterbody that is separated from that waterbody by an existing lot(s) of record having a developable area sufficient in size to legally accommodate development.

(22) Banner means a sign on a lightweight fabric, or similar non-rigid material, that is attached by at least two corners of such sign, to a building or structure. Flags of any country, state, unit of local government, institution of higher learning, or similar institution are not considered to be banners.

(23) Bed and Breakfast Use means a single-family dwelling in which overnight accommodations and a morning meal are provided to transients for compensation.

(24) Billboard. See Off-premises sign.

(25) Boarding or Rooming House means a dwelling or part thereof in which, for compensation, lodging or lodging and meals are provided to at least 3 and not more than 10 non-transient persons.

(26) Building means any structure having a roof supported by columns or walls and intended for the shelter, housing, or enclosure of any individual, animal process, equipment, goods or materials of any kind.

(27) Building Line means a line parallel to the street line touching that part of a building closest to the street.

(28) Business Service means an establishment primarily engaged in rendering financial or contractual services to businesses or individuals. These uses include but are not limited to financial institutions; insurance services, printing, mailing and packaging, photo finishing, billing services, employment services, protective services, and office equipment rental and leasing.

(29) CFO. See Confined Feeding Operation.

(30) Cattle shall include, but not be limited to, dairy cows, whether milked or dry, veal, calves, heifers, steers, bulls, and cow/calf pairs.

(31) Campground or RV Park means a lot or parcel on which two or more tents, cabins, lean-tos, recreational vehicle or other similar object is established or maintained as temporary living quarters for recreation, education, or vacation purposes.

(32) Club means an establishment operated for social, recreational or educational purposes that is open only to members and not to the general public.

(33) Clinic means an establishment in which patients are admitted on an outpatient basis by one or more physicians, dentists, other medical personnel, psychologists, or social workers and where patients are not usually lodged overnight.

(34) Co-Applicant the term "Co-Applicant" when used in connection with or in respect of a WECS shall mean a person or entity which executes an application for a WECS solely because of an ownership interest in real property to be used in connection with the WECS.

(35) Collector Any power line that carries electrical power from one or more wind turbines or individual transformers associated with individual wind turbines to the point of interconnection with the electrical power grid, in the case of interconnection with the high voltage transmission systems the point of interconnection shall be the substation serving the WECS.

(36) Commercial Center means a group of four or more separately operated commercial establishments, planned, developed, owned, and managed as a unit, with common off-street parking provided on the property.

(37) Commercial Message means any sign wording, logo, or other representation that, directly or indirectly, names, advertises, or calls attention to a business, industry, product, service, or other similar activity.

(38) Commercial Recreation means an establishment primarily engaged in providing recreational services to the general public, including auditorium, theater, bowling alley, billiard room, dance studio and amusement facility.

(39) Concentrated or Confined Feeding means the raising of animals for food, fur or recreation in lots, pens, ponds, sheds or buildings, where they are confined, fed and maintained for at least 45 days during any year, and where there is no ground cover or vegetation present over at least half of the animals' confinement area. Livestock markets and sale barns are excluded.

(40) Concentrated Feeding Operation (CFO) means any animal feeding operation (AFO) that has at least 300 cattle, 600 swine or sheep, or 30,000 fowl or any operation that is included within the definition in IC 13-11-2 or the definition in Section 502(14) of the federal Clean Water Act. Two or more concentrated animal feeding operations under common ownership are considered, for purposes of these regulations, to be a single concentrated feeding operation if they adjoin each other. Livestock markets and sale barns are excluded.

(41) Confined Animal Feeding Operation (CAFO) shall mean a livestock operation where livestock have been, are, or will be confined and concentrated for thirty (30) or more days in any twelve (12) month period, and such operation consists of at least 700 mature dairy cows, whether milked or dry; 1,000 veal calves; 1,000 cattle other than mature dairy cows or veal calves; 2,500 swine (each weighing 55 pounds or more); 10,000 swine (each weighing less than 55 pounds); 500 horses; 10,000 sheep or lambs; 55,000 turkeys; 30,000 laying hens or broilers (if the operation uses a liquid manure handling system); 125,000 chickens, other than laying hens (if the operation uses anything other than a liquid manure handling system); 82,000 laying hens; 30,000 ducks, or 5,000 ducks (if the operation uses a liquid manure handling system). Adjoining operations under common ownership are considered to be one animal feeding operation if they use common areas, buildings, equipment or manure handling systems.

(42) Convenience Store means any retail establishment not exceeding 3,500 square feet in area offering for sale prepackaged food products, household items, newspapers and magazines, along with other convenience items such as sandwiches, donuts, salads, coffee, and fountain drinks.

(43) Critical Wind Speed The wind speed at which WECS turbine sound pressure level are at greatest variance with ambient background sound pressure levels.

(44) Cul-de-sac means a street with only one outlet and having a paved, usually circular, turn-around at one end.

(45) Deck means an open platform, usually made of wood, with no walls or roof.

(46) Decommissioning Plan The term "Decommissioning Plan" with regard to a WECS shall have the meaning and include the requirements pursuant to the terms of the Ordinance.

(47) Decommissioning Security The term "Decommissioning Security" with regard to a WECS shall have the meaning and meet the requirements set forth in Article III, Section K, Paragraph 10 (a) of this ordinance.

(48) Department means the Planning Department of LaGrange County that produces or has responsibility for administering this Ordinance.

(49) Development Plan means a specific plan required by this Ordinance and in accordance with IC 36-7-4, the 1400 Series, showing the development details as required by Article 5, Section F.

(50) Development Plan (WECS) The term "Development Plan" with regards to a WECS shall have the meaning and content and meet the requirements pursuant to the terms of the Ordinance.

(51) Directional Sign means a standard design Sign on private property that gives direction such as location, entrances, exits, or street number to attractions.

(52) Discontinuance of Use or Abandonment means the relinquishment of property or a discontinuance of the use of the property by the owner or lessee for a continuous period of one year or more.

(53) Drainage Plan The term "Drainage Plan" with regards to a WECS shall mean the storm water management plan approved by the LaGrange County Drainage Board for the WECS Project as required from this ordinance.

(54) Drive-in Restaurant means a food service establishment where food is consumed on the premises outside of fully enclosed buildings or structures.

(55) Drive-through Establishment means any portion of a building or structure from which business is transacted, or is capable of being transacted, directly with customers located in a motor vehicle, which is usually left running, during such business transactions.

(56) Dwelling means a structure or portion thereof that is used exclusively for human habitation.

(a) Dwelling, Single-family or 1- family dwelling means a building that contains one dwelling unit and is not attached to any other dwelling unit.

(b) Dwelling, Two-family or 2-family dwelling means a building that contains two dwelling units totally separated from each other by an unpierced wall extending from ground to roof.

(c) Dwelling, Multifamily means a building containing three or more dwelling units, including units that are located one over the other.

(57) Economic Development Agreement (WECS) An agreement between the WECS Applicant, Owner and/or Operator and the County setting forth the Applicant, Owner and/or Operator's financial commitment to support economic development and/or provide other financial assistance in the County, or any portion thereof.

(58) Family means a group of individuals not necessarily related by blood, marriage, adoption, or guardianship living together in a dwelling unit as a single housekeeping unit under a common management plan based on an intentionally structured relationship providing organization and stability. . This definition does not include a group occupying a hotel, motel, club, nurses' home, dormitory, or fraternity or sorority house.

(59) Farm-based Business means business customarily associated with the agriculture practice in LaGrange County.

(60) Farm Market means a structure or portion thereof for the shelter, display and sale of food products, as specifically authorized by Indiana House Enrolled Act 1309, which products shall be produced on the premises with no space for customers within the structure itself. The term Farm Market shall be synonymous with the term Roadside Stand throughout this Ordinance.

(61) Farmers Market means a market at which two or more farmers or growers gather on a regular recurring basis to sell a variety of fruits, vegetables, food products allowed pursuant to Indiana House Enrolled Act 1309 and homemade crafts, which are sold directly to the public by the producer or producers. The term Farmers Market shall not include the resale of produce, food products or crafts which were not produced by the vendor themselves on the vendor's premises.

(62) Farm Worker means a person other than the owner of the farm, who for pay performs labor either seasonally or year round in the production, planting, cultivation or harvesting of farm products or the care of livestock.

(63) Farm Worker Housing means housing constructed in compliance with applicable building and health codes that is occupied seasonally only by farm workers employed on the farm where the housing is located.

(64) Fence means an upright, freestanding structure made of wood, masonry, vinyl, or similar material and designed to enclose, screen, or separate areas. Fences may not be made from trash, inoperable or junk vehicles, barrels, or any other material not designed to be used as fencing.

(65) Flag means a rectangular, square or similarly shaped piece of lightweight fabric of distinctive design that is used as a symbol of a

nation, governmental entity, business, institution, organization or similar entity.

(66) Flashing Sign means any sign that in whole or in part, physically changes in light intensity or gives the appearance of such change at intervals of less than 6 seconds.

(67) Frontage Road means a street that is approximately parallel to and separated from an arterial street by a buffer strip and designed to provide access to property from one side only.

(68) Garden Supply Center means a premises used for the sale of plants and trees, fertilizer, bagged mulch, lawn ornaments and similar items.

(69) Gasoline Station means a premises used for the retail dispensing of vehicular fuels. It may include sale of vehicle accessories such as lubricants, washer fluids, and ice scrapers.

(70) Governmental Sign means a Sign authorized by this municipality, another governmental agency, the State of Indiana, or the federal government. Such signs shall include, but not be limited to, street signs, safety signs, danger signs, trespassing signs, traffic signs, memorial plaques, signs of historical interest, informational signs and the like.

(71) Greenhouse means a building with a roof and sides made largely of a transparent or translucent material and in which the temperature and humidity can be regulated for the cultivation of delicate or out-of-season plants for subsequent sale or personal use or enjoyment.

(72) Ground Sign means a Sign supported by one or more uprights, posts, or bases, in or upon the ground and not attached to any part of a building.

(73) Guesthouse means living quarters within an accessory building for temporary use by guests of the occupants of the premises. Such quarters shall have no kitchen facilities and shall not be rented or otherwise used as a separate dwelling.

(74) Guest Quarters shall mean a structure that does not share a common wall with the owner's single family dwelling, that contains a room or rooms used for non-commercial temporary or seasonal occupancy by persons other than the owner of said structure, and that contains within said room or rooms sewage-producing facilities and facilities, furniture, appliances, or equipment for sleeping and/or for food preparation and/or storage.

(75) Height, Building means the vertical distance from the average grade adjoining the walls of the structure to the average of the highest points of the roof surface of a flat roof; or to the deck line of a mansard roof;

or the mean height level between eaves and ridge for a gable, hip or gambrel roof.

(76) Height, Sign means the distance measured in a vertical plane from grade at the edge of pavement of the adjacent street from which the property has immediate access to the highest point of the sign.

(77) Home-based Business means a business or profession that is clearly subordinate to a residential use, operated by occupants of the residence on the premises.

(78) Hotel or Motel means a building in which lodging is provided and offered to the public for compensation, and which is open to transient guests.

(79) Industrial Park means a tract of land that is planned, developed, and operated as an integrated facility for several individual industrial uses, with consideration to transportation facilities, circulation, parking, utilities, aesthetics, and compatibility.

(80) Junk means any scrap, waste, reclaimable material, or debris, that for sale, or in the process of being dismantled, destroyed, processed, salvaged, stored, baled, disposed, or other use or disposition.

(81) Junkyard means any area, lot, or other parcel of land used for the storage, collection, processing, purchase, sale, salvage, or disposal of junk.

(82) Kennel means a facility in which 5 or more dogs or other domesticated animals more than 6 months of age are housed, groomed, bred, boarded, trained, or sold.

(83) Lake means a reasonably permanent body of water substantially at rest in a depression in the surface of the earth, if both the depression and the body of water are natural origin or part of a watercourse. If part of a watercourse, a lake may be formed by damming a river or a stream. In determining the shoreline or water line of a lake, the following are included: (1) a bay or a cove, (2) a man-made channel connected to a public freshwater lake, (3) the mean high water line of the lake.

(84) Legal Lot of Record means lot created in accordance with applicable regulations that and shown or described on a plat or deed in the Office of the County Recorder.

(85) Livestock means animals other than customary domestic pets commonly associated with agriculture. These include but are not limited to cows, cattle, sheep, goats, hogs, horses, mules, llamas, and poultry.

(86) Livestock Facilities shall include all permanent or temporary buildings (or containment structures) used for housing and handling livestock, manure storage structures, feed storage, processing and mortalities.

(87) Livestock Pasturing Operation means any livestock operation that uses pasture, as defined under this ordinance, as the primary source of feed for the animals.

(88) Lot means a platted parcel of land, sufficient in size to meet the lot width, lot frontage, lot area, and other open space provisions of this Ordinance, and separately owned, developed, and otherwise operated as a unit.

(89) Lot Area means the total gross amount of horizontal land area within all lot lines. Public right-of-ways and private streets shall not be used in the calculation of lot areas.

(90) Lot Coverage means that portion of a lot that is covered by principal or accessory buildings or structures and by surfaces that prevent the passage or absorption of storm water such as paving and driveways.

(91) Lot Lines means the peripheral boundaries of a parcel of land and the total area lying within such boundaries.

(a) Lot Line, Front means the front property line which is coterminous with the street right-of-way. A front lot line is generally parallel to or less than 45 degrees to the rear lot line. The front lot line is generally opposite the rear lot line. See Figure 9-M-2.

(b) Lot Line, Rear means an internal lot line opposite a front yard. A rear lot line is generally parallel to or less than 45 degrees to the front street right-of-way line. Where the street line is an arc, the angle is measured from the tangent of the arc. A lot line greater than 45 degrees from the front street right-of-way line would be a side lot line. See Figure 9-M-2.

(c) Lot Line, Side means an internal lot line generally extending perpendicular to the front lot line. The side lot lines extend between the front lot line and the rear lot line. See Figure 9-M-2.

(92) Lot Width means the width of a parcel of land measured at the building setback line or required front yard setback. See Figures 9-M-1 and 9-M-2.

Figure 9-M-1

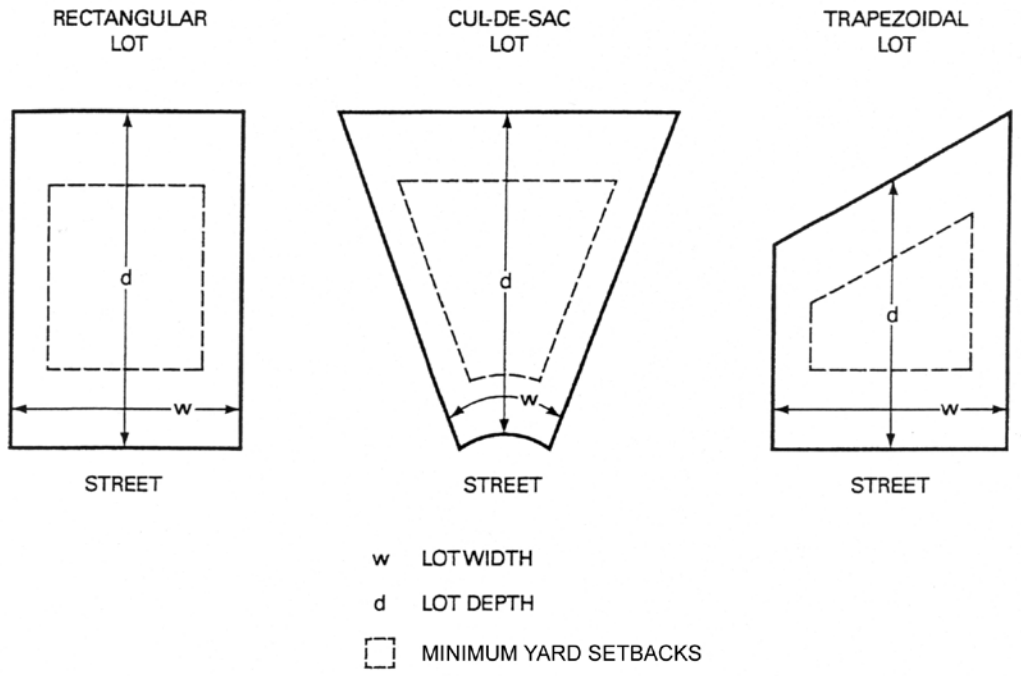

Figure 9-M-2

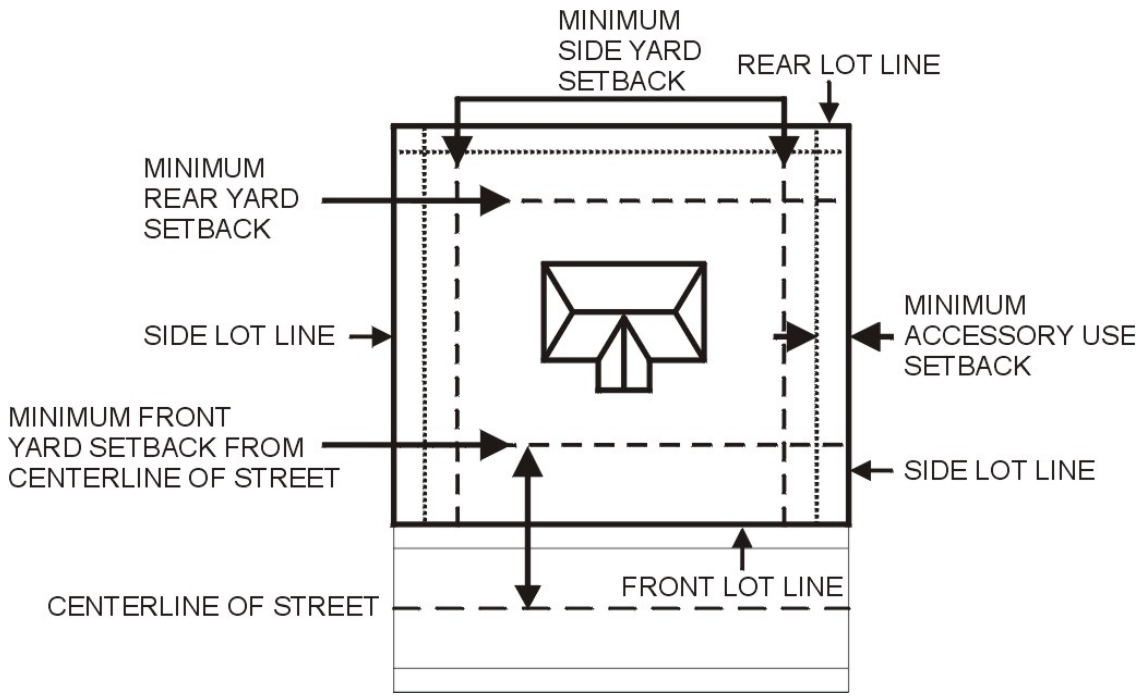

(93) Manufactured Home means a factory-built, single-family structure that meets the National Manufactured Home Construction and Safety Standards Act (42 U.S.C. Section 5401), commonly known as the HUD (U.S. Department of Housing and Urban Development) Code.

(94) Manufacturing means the mechanical or chemical transformation of materials or substances into new products, including the assembling of component parts, the creation of products, and the blending of materials, such as lubricating oils, plastics, resins, or liquors.

(95) Manure shall mean fecal material and urine from livestock, as well as animal-housing wash water, bedding material, rainwater or snow melt that comes in contact with fecal material or urine. Further liquid manure shall mean; manure handled as a liquid or slurry.

(96) Marina means a parcel of land that is utilized for one or more of the following activities:

(a) Provides storage for more than 8 boats or other watercraft.

(b) Provides servicing of boats and/or other watercraft.

(c) The sale of petroleum products for use in boats and/or other watercraft.

(d) The sale or rental of boats, watercraft, and fishing accessories, which may include the sale of convenience items.

(97) Message Board Sign means a portable sign designed to advertise a sale or special promotion by placing outside a store. Message Boards include, but are not limited to, A-frame, sandwich board and message stands.

(98) Mini-warehouse means a structure containing separate, individual, and private storage places of varying sizes, leased or rented on individual leases for varying periods of time.

(99) Mobile Home means a structure transportable in one or more sections, which, in the traveling mode, is eight body feet or more in width at its narrowest dimension which when erected on site, is 320 or more square feet, and which is built on a permanent foundation when connected to the required utilities, and includes the plumbing, heating, air conditioning, and electrical system contained therein, and which was manufactured prior to the effective date of the federal Manufactured Home Construction and Safety Act of 1974, which became effective June 15, 1976.

(100) Mobile Home Park means a parcel of land containing two or more spaces, with required improvements and utilities, leased for the long-term placement of mobile homes.

(101) Monument Sign means a freestanding sign placed on a solid base directly on the ground.

(102) Non-conforming Sign means a sign in place before the effective date of this Ordinance that does not comply with all of the requirements of this Ordinance, but that does comply with all of the requirements of the previous Ordinance.

(103) NPDES Permit means a National Pollutant Discharge Elimination System permit.

(104) Off-premises Sign means a sign, including the supporting sign structure, that is visible from a street or highway and advertises goods or services not located on the premises upon which the sign is located.

(105) Operator shall mean an individual or group of individuals, a partnership, a corporation, a joint venture, or any other entity owning or controlling one or more animal feeding operations or animal wintering operations.

(106) Operator (WECS) The term "Operator" when used in connection with or in respect of a WECS shall mean any person or entity which has the primary involvement with or responsibility for the use, operation, or maintenance of all or a portion of the WECS.

(107) Owner means a person owning a sign.

i) Parcel in Incorporated Area: Contiguous real estate taxed as a single parcel on one side of a public road.

ii) Parcel in Unincorporated Area: A tax parcel as established by the LaGrange County property tax database.

(108) Owner (WECS) The term "Owner" when used in connection with or in respect of a WECS shall mean any person or entity and his, her or its assigns and successors in interest which has any ownership interest in any or all of the necessary devises to convert wind energy into electricity as herein defined as a WECS. The term "Owner" does not include any person or entity whose ownership interest in a WECS limited to in interest in real property which is used in a WECS.

(109) Pasture means an area where crops, vegetative forage growth, or post-harvest residues are sustained for the purpose of grazing animals in that area.

(110) Pasturing means a livestock operation in which animals graze in a pasture.

(111) Pennant means any lightweight plastic, fabric or other material, whether or not containing a message of any kind, suspended from a rope, wire, or string, usually in series, designed to move in the wind.

(112) Permanent Sign means a sign that is attached to the ground or to a building in such a manner that it is not intended to be frequently removed or replaced and is not a portable or temporary sign as defined in this Ordinance.

(113) Permit means the authorization for a Sign issued by the Department.

(114) Person means any individual or entity, including a firm, partnership, association, corporation, limited liability company, trustee, and their legal successors.

(115) Personal Care Services means facilities that offer supervision, assistance, and activities for special populations. Uses include but are not limited to day care centers for children or adults, children's homes, nursing homes, senior centers, and neighborhood social centers.

(116) Personal Services means establishments primarily engaged in providing services involving the care of a person or his or her personal goods or apparel. These uses include but are not limited to laundry, dry cleaning, beauty or barber shops, diaper service, and shoe repair.

(117) Plant Nursery means a premises used for growing plants or trees intended to be used as landscaping materials.

(118) Professional Office means an office used by members of a recognized profession such as architects, artists, dentists, engineers, lawyers, musicians, physicians, and surgeons.

(119) Principal Building means a building in which the principal use of the lot on which it is located is conducted, including a building that is attached to such a building in a substantial way, such as by a roof (with respect to residential uses, it means the main dwelling).

(120) Projected Sound Emissions Study A study predicting the sound pressure levels that will be produced by a WECS Project. This study shall include a brief summary of the study methodology and a sound contour map in five (5) decibel increments displayed as an overlay on an aerial photograph of the project area to a minimum of 40 decibels. The study shall be done at the maximum turbine sound level as provided by the manufacturer.

(121) Projecting Sign means a sign affixed to any part of a building or structure which extends beyond the building or structure by more than twelve inches.

(122) Recreational Facility means a place designed and equipped for the conduct of sports and leisure-time activities.

(a) Recreational Facility, Private means a recreational facility operated by a commercial enterprise or by a nonprofit organization.

(b) Recreational Facility, Public, means a recreational facility owned or operated by a unit of government, a recreational facility included in a subdivision approved by the Plan Commission and operated for the benefit of all of the lot owners in the subdivision.

(123) Recreational Vehicle means a vehicular-type portable structure without permanent foundation that can be towed, hauled, or driven. It may be designed as temporary living accommodations and used for recreational, camping, and travel use. Recreational vehicles include, but are not limited to truck trailers, truck campers, pop-up tents, boats, jet skis, personal watercraft, snowmobiles, camping trailers, and self propelled campers.

(124) Religious Facility means a structure or place in which worship, ceremonies, rituals, and education pertaining to a particular system of beliefs are held. This definition includes a parochial school.

(125) Residential Neighborhood Identification Sign means a Sign at the entrance of a residential neighborhood identifying the neighborhood.

(126) Retail Services means establishments primarily engaged in the sale of everyday household and consumer goods, including but not limited to drugstores, variety stores, book and stationery stores, newsstands,

candy and ice cream stores, grocery stores, florist, gift, antique, art, music, toy and hobby shops, package liquor stores, paint and wallpaper stores, jewelry stores.

(127) Retail Sales, Outdoor means the display and sale of products and services primarily outside of a building or structure. Outdoor retail sales uses include but are not limited to automobile dealerships, boat sales, farm equipment sales, flea markets, lumberyards, and landscaping materials sales.

(128) Retail Use, Big Box means a single retail establishment containing 75,000 square feet or more.

(129) Retail Uses, General means establishments primarily engaged in the sale of goods or provision of services to the general public, including but not limited to department stores, furniture, carpet, interior decorating, upholstering, furrier, and office supply stores; restaurants and catering establishments; hotels, taverns and nightclubs; and storage, processing and/or conditioning when incidental to any of these uses.

(130) Roof Sign means a Sign erected, constructed, or maintained upon, or which projects above the roof line of a building.

(131) Services Involving Specified Sexual Activities or Display of Specified Anatomical Areas means any combination of 2 or more of the following activities:

(a) The sale or display of books, magazines, periodicals or other printed matter, or photographs, films, motion pictures, video cassettes, slides, tapes, records or other forms of visual or audio representations which are characterized by an emphasis upon the depiction or description of Specified Sexual Activities or Specified Anatomical Areas;

(b) The presentation of films, motion pictures, video cassettes, slides, or similar photographic reproductions which are distinguished or characterized by an emphasis upon the depiction or description of Specified Sexual Activities or Specified Anatomical Areas for observation by patrons;

(c) The operation of coin or slug operated or electronically, electrically or mechanically controlled still or motion picture machines, projectors or other image producing devices to show images to 5 or fewer persons per machine at any one time and where the images so displayed are distinguished or characterized by an emphasis on depicting or describing Specified Sexual Activities or Specified Anatomical Areas;

(d) Live performances by topless or bottomless dances, go-go dancers, exotic dancers, strippers, or similar entertainers, where such performances are distinguished or characterized by an emphasis on Specified Sexual Activities or Specified Anatomical Areas.

(132) Setback means the distance between a building and any lot line. See Figure 9-M-2.

(a) Setback, Front Yard shall mean the horizontal distance between the base setback line and the nearest roofed or enclosed portion of a building or any projection thereof, excluding uncovered steps and stoops, gutters, and awnings. Where the street line is an arc, the setback shall be measured from the arc. The front yard setback may also be called the street yard setback. See Figure 9-M-2.

(b) Setback, Rear Yard shall mean the minimum horizontal distance between the rear internal lot line and a line parallel thereto through the nearest roofed or enclosed portion of the principal structure, excluding uncovered steps and stoops, gutters, and awnings. A rear lot setback is opposite a front yard setback. A rear yard setback is not measured from a public road or street frontage. See Figure 9-M-2.

(c) Setback, Side Yard shall mean the minimum horizontal distance between the side internal lot line and a line parallel thereto through the nearest roofed or enclosed portion of the principal structure, excluding uncovered steps and stoops, gutters, and awnings. The side yard setback does not extend beyond the front building face into the front yard, or beyond the rear building face into the rear yard. See Figure 9-M-2.

(133) Setback Line means the line that is the required minimum distance from any lot line and that establishes the area within which the building or structure must be erected or placed. See Figure 9-M-2.

(134) Shooting Range – a permanently located and improved area designed and operated for the use of rifles, shotguns, pistols, silhouettes, skeet, trap, black powder and other similar sport shooting in an indoor or outdoor environment. The area may be publicly or privately owned and operated for profit or not for profit. "Shooting range" does not include any area for the exclusive use of archery or air guns.

(135) Small Wind Energy Conversion System ("SWECS") A wind energy system designed and installed exclusively for the on-site use of any associated electric power generation with a manufacturer's rating of 10 kilowatts or less.

(136) Solar Panel Array means a freestanding configuration of solar panels for residential or light commercial use, which configuration shall not exceed nine hundred (900) square feet in area:

(137) Special Event Sign means a Sign for events such as grand openings, vehicle shows, displays, craft shows, benefits, fund-raisers, festivals, and other limited term events.

(138) Specified Anatomical Areas means any of the following:

(a) Less than completely and opaquely covered human genitals, pubic region, buttocks, anus or female breasts below a point immediately above the top of the areolae; or

(b) Human male genitals in a discernibly turgid state, even if completely and opaquely covered.

(139) Specified Sexual Activities means any of the following:

(a) Human genitals in a state of sexual stimulation or arousal;

(b) Acts of human masturbation, sexual intercourse or sodomy;

(c) Fondling or other erotic touchings of human genitals, pubic regions, buttocks or female breasts;

(d) Flagellation or torture in the context of a sexual relationship;

(e) Masochism, erotic or sexually oriented torture, beating or the infliction of pain;

(f) Erotic touching, fondling or other such contact with an animal by a human being; or

(g) Human excretion, urination, menstruation, vaginal or anal irrigation as part of or in connection with any of the activities set forth in "a" through "f" above.

(140) Stable, commercial means a structure and/or land use in or on which equines are kept for sale or hire to the public. Breeding, boarding, or training or equines may also be conducted.

(141) Stable, private means an accessory structure and/or land use that is designed, arranged, used , or intended to be used for the keeping of equines for the private use of the occupants of a principal dwelling, but in no event for hire, boarding, or other business use.

(142) Stem Lot means a lot having a width of between 50’ and the minimum lot width frontage required in that district, and having the building line in excess of the front yard setback distance in that district shall be deemed to have three side yards and a rear yard, and comply to the respective setback requirements for the district.

(143) Street means a right-of-way dedicated or otherwise legally established for public use, which affords the principal means of access to abutting property. A street may be designated as a highway, thoroughfare, parkway, boulevard, road, avenue, lane, drive or other appropriate name. A street may also be classified according to function as follows:

(a) Expressways are limited-access highways that carry large volumes of traffic and are of more importance regionally than locally. They provide continuous, high-speed traffic flow.

(b) Arterial Streets are high-capacity, high-volume streets that provide access to and through the county. The primary function of these streets is traffic movement, not access to property.

(c) Collector Streets are medium-volume roads that collect and distribute traffic from lower-classification streets to arterials and expressways or activity centers. Traffic movement on these roads is a higher priority than access to property.

(i) **Major Collector Streets** are intended primarily for non-residential traffic. Direct access to property from these streets is extremely limited.

(ii) **Minor Collector Streets** are intended primarily for residential traffic. Direct access to property from these streets is permitted under specified circumstances.

(d) Local Streets are medium-volume roads that form the majority of the county road network. Often they are part of the numbered county road system and are typically longer than subdivision streets. While in some cases these streets may provide direct access to property, their primary function is traffic movement.

(e) Subdivision Streets are low-capacity, low-speed roads intended primarily to serve as direct access to property.

(144) Strobe Light means a flash lamp that produces high-intensity short-duration light pulses by electric discharge in a gas.

(145) Subdivision Identification Sign means a freestanding, monument sign identifying a subdivision, apartment complex, or other similar neighborhood.

(146) Structure means anything constructed or erected on the ground or having a fixed location on the ground or attached to something having a fixed location on the ground, including but not limited to buildings, factories, sheds, detached garages, cabins, mobile homes, manufactured homes, free-standing signs, and other similar items.

(147) Surface Water shall mean waters of the state located on the ground surface such as lakes, ponds, marshes, watercourses, waterways, reservoirs, rivers and creeks.

(148) Transportation Plan Detailed route plan recommended by the WECS Transportation Committee and approved by the LaGrange County Commissioners used for construction and maintenance by a WECS including plans for temporary road closures and traffic rerouting, plans for the repairs, replacement and/or reconstruction of all damage to roads, bridges, signage, vehicles, drainage structures, and other public or private improvements damaged by the WECS construction and maintenance, and the posting or repair, replacement and maintenance bonds and such other matters as my be determined to be necessary and appropriate to protect the health and safety of motorists and to preserve and maintain the affected roads, bridges, and other public and private improvements.

(149) Unsafe Sign any Sign that becomes insecure, in danger of falling or otherwise unsafe but not considered an immediate danger by the Ordinance Enforcement Officer to the health or safety of the public.

(150) WECS Net Salvage Value The net value of the towers, nacelles, generators, turbines, blades, wires, transformers, and all other saleable parts and commodities which make up the WECS whether sold as used parts or on a commodity/scrap basis or any combination thereof (whichever is greater) after deducting all estimated costs and expenses of sale (including but not limited to all commissions and fees) and the amount necessary to pay and satisfy all liens, security interests, and other encumbrances attaching to the WECS. The commodity/scrap value shall be based on the prior five (5) years average scrap value of the commodity.

(151) Wall Sign means a Sign attached to, painted upon, placed against, or supported by the exterior surface of any building

(152) Warehouse means a building used primarily for the storage of goods and materials.

(153) Waste Disposal Facility means a tract of land that is used to store or process materials that are discarded by households, businesses, industries, or other entities. Waste includes both recyclable and non-recyclable materials.

(154) Wetland means land that based on soils and vegetation has been classified as "wetland" by a government agency.

(155) Wind Energy Conversion System All necessary devices referred to in the Zoning Ordinance that together convert wind energy into electricity and deliver that electricity to a utility's transmission lines,

including but not limited to the rotor, nacelle, generator, WECS Tower, electrical components, WECS foundation, transformer and electrical cabling from the WECS Tower, the substations, switching stations, meteorological towers, communication facilities and other required facilities and equipment, as related to the WECS project.

(156) Wind Energy Conversion System Overlay This district is intended to define areas, which because of their location and wind resources, are recommended and best suited for the establishment of commercial WECS. This district will permit and regulate the development of WECS to minimize impact on underlying zoning district and potential for conflict with other uses.

(157) Wind Energy Conversion System Project The collection of WECS – Commercial (as defined) as specified in the Development Plan (alternatively "the WECS Overlay Application") pursuant to this ordinance.

(158) Window Sign means a sign applied, painted or affixed to, or in the window of a building and clearly visible from the street, alley, or parking area. A window sign may be temporary or permanent.

(159) Yard means an open space that lies between the principal building or buildings and the nearest lot line. The minimum required yard as set forth in the ordinance is unoccupied and unobstructed from the ground upward except as specifically provided in this Ordinance.

(a) Front Yard means a space extending the full width of the lot between any building and the front lot line and measured perpendicular to the building at the closest point to the front lot line.

(b) Rear Yard means a space extending across the full width of the lot between the principal building and the rear lot line and measured perpendicular to the building to the closest point of the rear lot line.

(c) Required Yard means the open space between a lot line and the yard line within which no structure shall be located except as provided in this Ordinance.

(d) Side Yard means a space extending from the front yard to the rear yard between the principal building and the side lot line and measured perpendicular from the side lot line to the closest point of the principal building.

THIS PAGE IS INTENTIONALLY LEFT BLANK

Index

Accessory Uses, 47,48,49, 50, 68, 137
Adult Entertainment Business, 52
Agricultural Dimensional and Intensity Standards, 57
Agricultural Districts, 7
Animal Feeding Operations, 18
Appeal, 142, 151, 153, 154
Approved Projects, 5
Bed and Breakfast Use, 22, 173
Beneficial Use Determination, 158
Board of Zoning Appeals, 25, 52, 77, 97, 136, 137, 138, 139, 141, 142, 143, 144, 145, 148, 149, 150, 151, 159, 166
Boarding or Rooming House, 21, 173
Business Dimensional and Intensity Standards, 60
Business Districts, 9, 10, 11, 26, 27
Campground or Recreational Vehicle Park, 24, 100
Citations, 165
Complete Applications, 5
Comprehensive Plan, 1, 7, 8, 10, 47, 96, 97, 142, 149
Conditional Uses, 141, 142, 150
County Auditor, 1, 159
County Commissioners, 1, 2, 96, 97, 139, 140, 141, 143, 145, 146, 147, 148, 152, 153, 154, 157, 158, 159, 160, 161, 162, 163, 164
County Council, 140, 143
Development Plan, 26, 27, 28, 68, 97, 139, 175
Distances, 62
Drive-Through Windows, 27
Dwelling unit, 20, 23, 24, 48, 50, 59, 76, 98, 100, 176
Effective Date,4, 5, 71, 72, 83, 135, 137, 138, 181
Environmental Requirements, 29
Farm worker housing, 15, 21, 176
Farm-Based Business, 15, 24, 57, 176
Height, 57, 58, 60, 61, 156, 177, 178
Home-Based Business, 15, 17, 23
Industrial districts, 10, 11, 28
Inspections, 164
Institutional Uses, 24
Intensity and Dimensional Standards, 7, 10, 11
Intersection Visibility, 68
Kennel, 15, 24, 26, 48, 178
Landscaping, 29, 83
Lighting, 70, 71, 82
Loading Requirements, 78
Lot Area, 179
Lot Coverage, 179
Lot of Record, 137
Lot Width, 179
Manufactured Home, 50, 98, 100
Manufactured Home Parks, 98, 100
Manufactured Home Subdivisions, 98
Map Amendments, 146
Noise, 69, 70
Nonconforming Uses, 135
Nonconformity, 4, 135, 136
Nuisance, 53, 71, 151, 165
Outdoor Storage, 27, 69, 76, 84
Overlay Districts, 7, 12
Park or Recreational Facility, 25
Parking, 21, 31, 48, 51, 69, 71, 72, 73, 75, 77, 80, 81, 82, 84
Penalties, 164, 165
Percentages and Fractions, 62

Plan Commission, 2, 25, 53, 68, 77, 78, 96, 97, 139, 140, 141, 143, 144, 145, 146, 147, 148, 152, 153, 154, 155, 157, 158, 159, 160, 166, 183
Planned Unit Developments, 12, 96, 151
Planning Department, 1
Religious Facility, 24, 76, 184
Residential Dimensional and Intensity Standards, 58
Residential Districts, 8, 9, 50, 51
Sand and Gravel Extraction, 25
Setback, 185
Setbacks in Improved Areas, 65
Sign Area, 62
Signage, 31
Signs, 23, 51, 62, 81, 138, 167, 188
Staff, 24, 51, 68, 83, 139, 142, 144, 145, 148, 152, 154, 155, 158, 164, 165, 166
Storage, 28, 69, 84
Subdivision, 5, 17, 25, 53, 69, 153, 154, 157, 183, 187
Subdivision Control Ordinance, 5
Temporary Uses, 50
Text Amendments, 146
Use Table, 7, 9, 10, 11, 15
Variance, 142, 148, 149, 150, 162, 166
Vehicle Stacking Areas, 79
Violation, 4, 24, 53, 83, 84, 144, 148, 164, 165, 166, 167
Yard, 185
Zoning Administrator, 68, 77, 145, 160
Zoning Compliance Certificate, 3, 83
Zoning District, 5, 7, 12, 56, 97, 136, 147
Zoning Map, 1, 2, 7, 141, 146, 147, 148